Perfect Fitting Half-Laps Everytime

Learn How to Make Beautiful Frame and Raised Panels

Woodsmith®

www.Woodsmith.com

Vol. 24 / No. 140

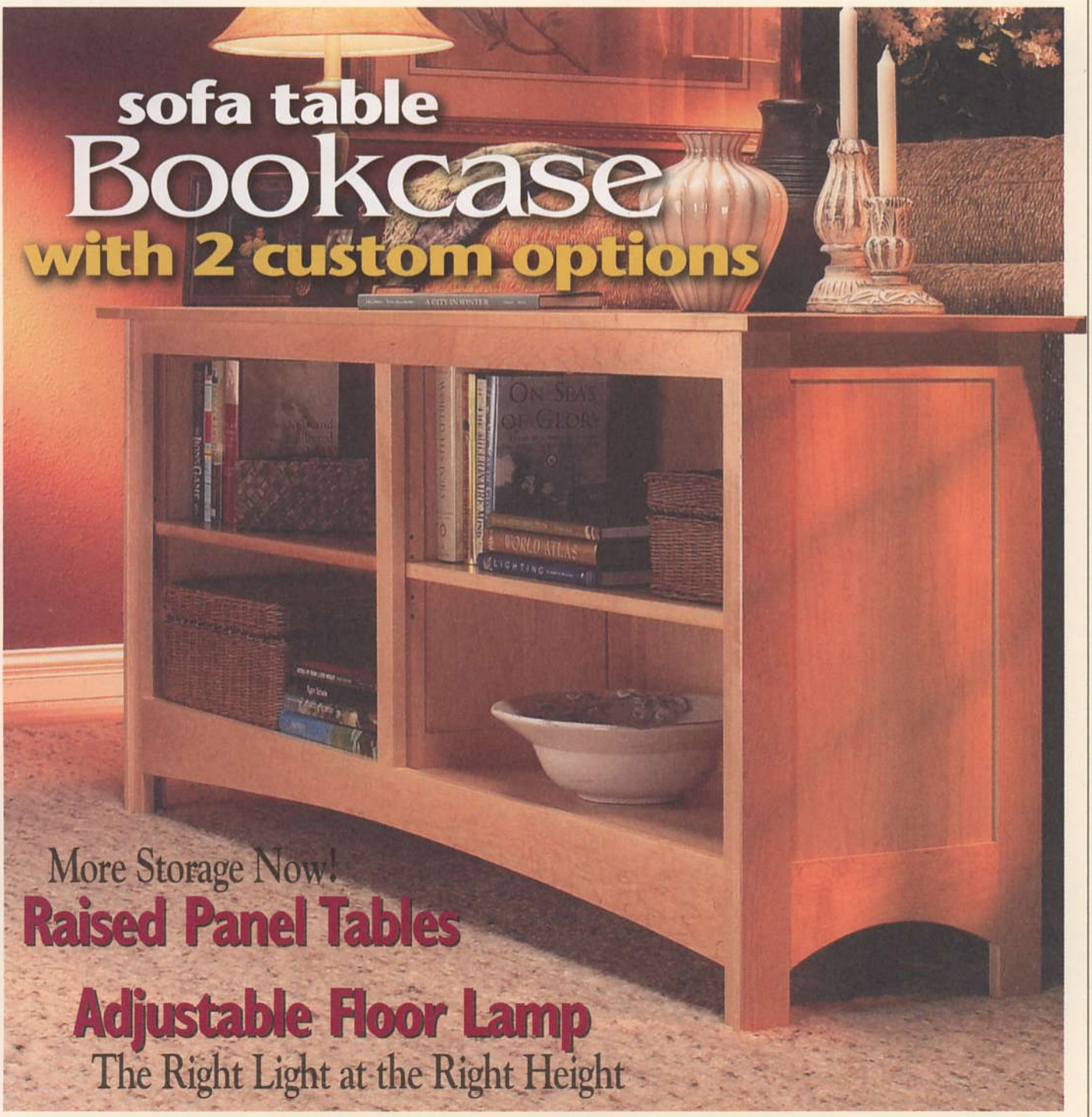

A Publication of August Home Publishing

Woodsmith

No. 140 April, 2002

Publisher Donald B. Peschke
Editor Terry J. Strohman
Senior Editor Jon Garbison
Assistant Editor Brian McCallum
Contrib. Editor Craig Ruegsegger
Art Director Todd Lambirth
Senior Illustrators David Kreyling, Dirk Ver Steeg, Harlan V. Clark
Graphic Intern Jonathan Eike

CREATIVE RESOURCES
Creative Director: Ted Kralicek • *Project Developer:* Ken Munkel • *Sr. Project Designers:* Kent Welsh, Ryan Mimick • *Project Designers:* Chris Fitch • *Shop Craftsmen:* Steve Curtis, Steve Johnson • *Sr. Photographer:* Crayola England

SPECIAL PUBLICATIONS
Corp. VP: Douglas L. Hicks • *Art Director:* Douglas A. Flint • *Senior Graphic Designer:* Chris Glowacki • *Assoc. Editor:* Craig Ruegsegger • *Assistant Editors:* Joel A. Hess, Joseph E. Irwin • *Graphic Designer:* Vu Nguyen • *Graphic Intern:* Matt O'Gara

CIRCULATION
Subscriber Services Director: Sandy Baum • *New Business Circ. Mgr.:* Wayde Klingbeil • *Multi-media Promotions Manager:* Rick Junkins • *Promotions Analyst:* Patrick Walsh • *Renewal Mgr.:* Paige Rogers • *Billing & Collections Manager:* Rebecca Cunningham • *Circ. Marketing Analyst:* Kris Schlemmer • *Assoc. Circ. Marketing Analyst:* Paula M. DeMatteis • *Sr. Graphic Designers:* Mark Hayes, Robin Friend

CORPORATE SERVICES
VP of Finance: Mary R. Scheve • *Controller:* Robin Hutchinson • *Sr. Account.:* Laura Thomas • *Accts. Payable:* Mary J. Schultz • *Accts. Receivable:* Margo Petrus • *Production Dir.:* George Chmielarz • *Electronic Publishing Director:* Douglas M. Lidster • *Network Administrator:* Cris Schwanebeck • *PC Maint. Tech.:* Robert Cook • *Pre-press Image Specialists:* Troy A. Clark, Minniette Johnson • *New Media Mgr.:* Gordon C. Gaippe • *Web Site Art Dir.:* Gene Pedersen • *Web Server Admin.:* Carol Schoeppler • *Web Content Mgrs.:* David Briggs, Sue M. Moe • *Web Designer:* Kara Blessing • *Professional Development Dir.:* Michal Sigel • *H.R. Asst.:* Kirsten Koele • *Office Mgr.:* Noelle Carroll • *Receptionist:* Jeanne Johnson • *Mail Room/Delivery:* Lou Webber

WOODSMITH MAIL ORDER
Operations Director: Bob Baker • *Customer Service Mgr.:* Jennie Enos • *Warehouse Supr.:* Nancy Johnson • *Buyer:* Linda Jones • *Tech. Service Rep.:* Johnny Audette • *Admin. Assist.:* Nancy Downey • *Cust. Serv. Team Leader:* Tammy Truckenbrod • *Sr. Cust. Serv. Reps.:* Anna Cox, April Revell, Deborah Rich • *Cust. Serv. Reps.:* Ed Arthur, Valerie Riley • *Warehouse:* Sylvia Carey, Sheryl Knox, Al Voigt

WOODSMITH STORE
Mgr.: Dave Larson • *Asst. Manager:* Tim Thelen • *Sales Staff:* Wendell Stone, Jim Barnett, Larry Morrison, Mark Johnson, Gregory Kauzlarich, Joe Kucera • *Office Mgr.:* Vicki Edwards

Woodsmith® (ISSN 0164-4114) is published bimonthly (Feb., Apr., June, Aug., Oct., Dec.) by August Home Publishing Company, 2200 Grand, Des Moines, IA 50312.

Woodsmith® is a registered trademark of August Home Publishing.
Copyright© 2002 August Home Publishing Company. All rights reserved.

Subscriptions: Single copy: $4.95. One year subscription (6 issues), $24.95. (Canada/International add $10 per year, U.S. funds.)
Periodicals Postage Paid at Des Moines, IA and at additional offices. USPS/Perry-Judd's Heartland Division Automatable Poly.
Postmaster: Send change of address to *Woodsmith*, Box 37112, Boone, IA 50037-2112.
Subscription Questions? Write to *Woodsmith*, P.O. Box 842, Des Moines, IA 50304-9961 or call 1-800-333-5075, 8:00 am to 5:00 pm, Central Time, weekdays. Or send an email to: orders@woodsmith.com
Email: woodsmith@woodsmith.com
World Wide Web: http://www.woodsmith.com

Printed in U.S.A.

AUGUST HOME PUBLISHING COMPANY

SAWDUST

Quite often we think of woodworking as a very traditional type of activity. And I agree it has a wonderful, rich history. But when you think about it, it's really as much about change as it is tradition.

For centuries woodworkers have modified and changed the types of joinery they use. Furniture styles have evolved and changed over the years. Not to mention the tools used to build the projects.

Even today, this idea of change runs through every project we build here at *Woodsmith*. We start with a basic idea of what we want. Then we make numerous changes to the project before it appears in the magazine. But the process doesn't end there.

Once you start building a project the change continues. You may change the type of wood or modify the style. You might decide on different hardware or use a different type of joint. In short, you build the project to suit your needs. And that's how it should be — it's the tradition.

The trouble is sometimes you may think about changing a project, but you're not quite sure how it will look. To make this process a bit easier, we're showing you how the feature project, the Sofa Table Bookcase, would look with a couple of different door options — glass and solid wood.

We're also giving you an online opportunity to see how this project would look if built in a different wood and with different hardware. Just go to www.Woodsmith.com and check out the Online Extras.

BOARD OF ADVISORS. Besides looking to make better projects, we're always investigating ways to improve *Woodsmith* and make it more useful.

To do this, we're setting up an Online Board of Advisors. It will be made up of woodworkers who want to give us their opinion of *Woodsmith*. For more information on being part of this group, see the box below.

HELP WANTED. If you are interested in a more "hands-on" approach to being a part of a magazine, we're looking for an editor to join us here at August Home Publishing. If you're enthusiastic about woodworking or home improvement and enjoy working as part of a team, then we'd like to hear from you. Send a cover letter and a resume highlighting your experience to: M. Sigel, 2200 Grand Ave., Des Moines, IA 50312. Or send an email to: msigel@augusthome.com.

Terry

Tell Us What You Think . . .

Here's the deal. We're looking for a limited number of dedicated readers to help make *Woodsmith* even more useful. And we'd like your help. Over the next year or so, we'll contact you with questions about the magazine, project and article ideas, and different woodworking topics. If you'd like to help shape *Woodsmith* in the future, please go to our web site: **www.Woodsmith.com** and click on the Board of Advisors button.

Woodsmith Board of Advisors Online

Note: You must sign up before April 25th, 2002 to be part of this year's Online Board. This opportunity is only available online so you'll need to have internet access and email.

A LOOK INSIDE

CONTENTS

Features

Sofa Table Bookcase 6

Featuring solid-wood construction and a distinctive design, this long, low bookcase will fit great behind a sofa. Of course, once you see it with some optional doors, you'll realize this project could go just about anywhere.

Frame & Raised Panels 16

Frame and panel construction is one of the hallmarks of fine cabinet-making. And with two shop-tested methods for making the raised panels, you'll be turning out perfect frame and panel assemblies in no time.

Adjustable Floor Lamp 22

This one-of-a-kind floor lamp can be adjusted by loosening a small wood knob and raising or lowering its center column. It's a unique feature that doesn't require any tricky joinery or special hardware.

Trouble-Free Half Laps 28

Half laps are strong, quick, and versatile. In short, they're a great way to join two pieces or build a frame. Here, we'll walk you through the process from setup to assembly.

Frame & Panel Storage Tables 30

With solid-wood frame and panel assemblies on all four sides, this accent table looks good from any angle. And under the lift-off lid, you'll find lots of practical storage space.

Departments

Tips & Techniques 4
Shop Notes 20
Sources 35

Sofa Table Bookcase *page 6*

Adjustable Floor Lamp
page 22

Frame & Panel Storage Tables *page 30*

TIPS & TECHNIQUES

FREE
Online Tips

If you'd like even more woodworking tips, the solution is simple. Just visit us at our web site and sign up to receive a free tip via email every week.

www.woodsmith.com

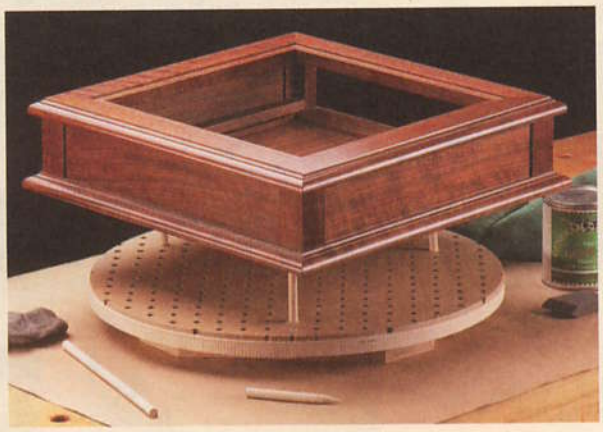

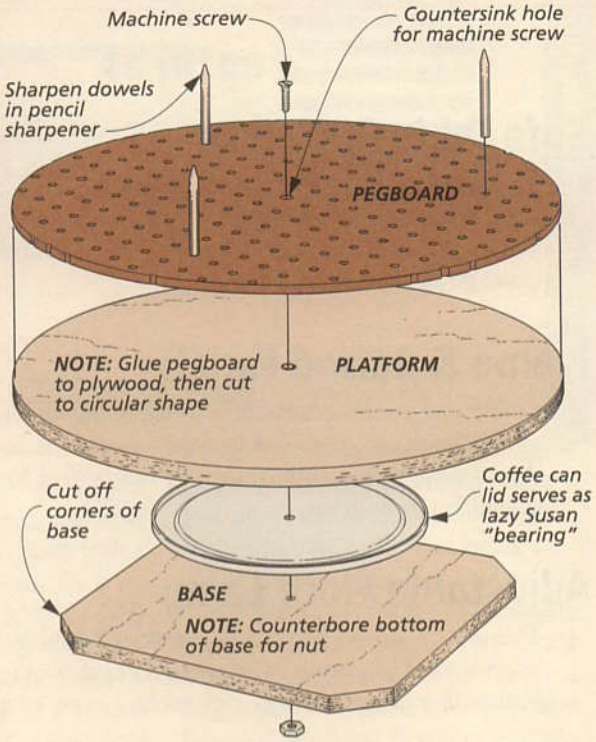

Finishing Carousel

No matter how you set a project when applying finish, it seems there's always part of it that can't be reached. This finishing carousel allows me to rotate a project so I can reach each side. And a set of pointed pegs lifts the workpiece so I can even get to the bottom surfaces.

As you can see in the drawing, the carousel is just two pieces of plywood with a coffee can lid in between them to serve as a "bearing." (My carousel is 18" in diameter, but it's easy to make it any size you need.)

A piece of pegboard on top of the plywood platform serves as a template when drilling holes for the pegs. Plus it adds a bit of extra support to the pegs.

The base is just a square cut to fit inside the circle. I cut off the corners so I wouldn't catch my fingers on them when I was turning the carousel.

The pieces are joined with a machine screw and nut. I drilled a countersink in the top of the pegboard for the head of the screw and counterbored the plywood base for the nut.

The pegs are lengths of 1/4" dowel sharpened in a pencil sharpener.

Ernest Becker
Lacey, Washington

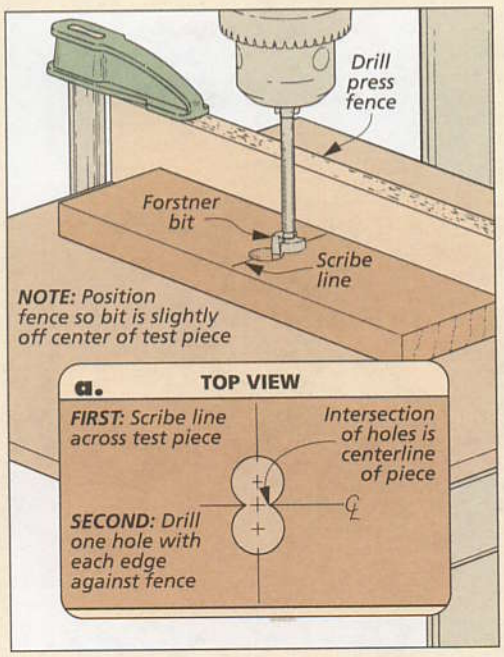

Stock Centerline

In *Woodsmith* 137, you had a tip about using the drill press to find the center of a workpiece. Here's an even easier way that only requires drilling two holes.

Just scribe a line across a test piece that's the same width as your workpiece (see drawing). Then place the test piece against the fence and drill a hole on the line. Now flip the piece around and drill a second hole on the line. Where the holes intersect is the centerline (detail 'a').

Doug Pilcher
California City, California

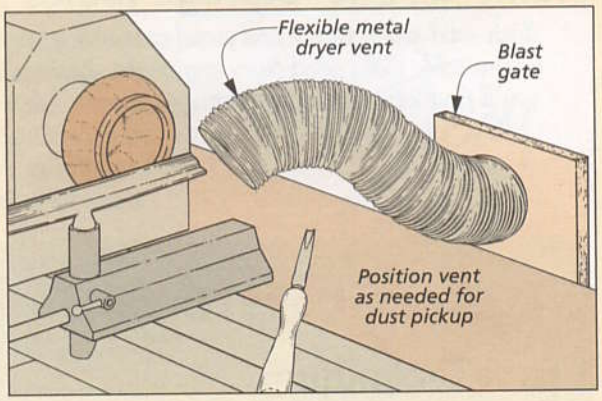

Dryer Duct Dust Pick-up

It's not always easy to get a dust collector pick-up where you want one. I found that a section of flexible metal dryer duct will fit perfectly onto the flange around my blast gates. As you can see in the drawing, the duct can be positioned where it's needed.

Don Sundquist
Midland, Michigan

Swing-Away Arm

In my shop, there was just no easy (and safe) way to get an extension cord and a dust collection hook-up where I wanted them and then easily move them out of the way when I was done.

Then I came up with the idea of hanging them from a hinged boom. That way I could swing them to my work area when I needed power or dust collection and swing them back out of the way when the job was finished.

As you can see in the drawing, the arm is made of 2x4s with a plywood brace to reinforce the knee joint. A couple of butt hinges fasten the arm to another 2x4 that is anchored to the wall.

The extension cord and dust collection hose are attached to the arm with some zip ties threaded through eyelet screws.

Since the cord and hose no longer lay on the floor, I don't trip over them — and I don't have to bend over to hook up a tool.

Dennis Robertson
Bremerton, Washington

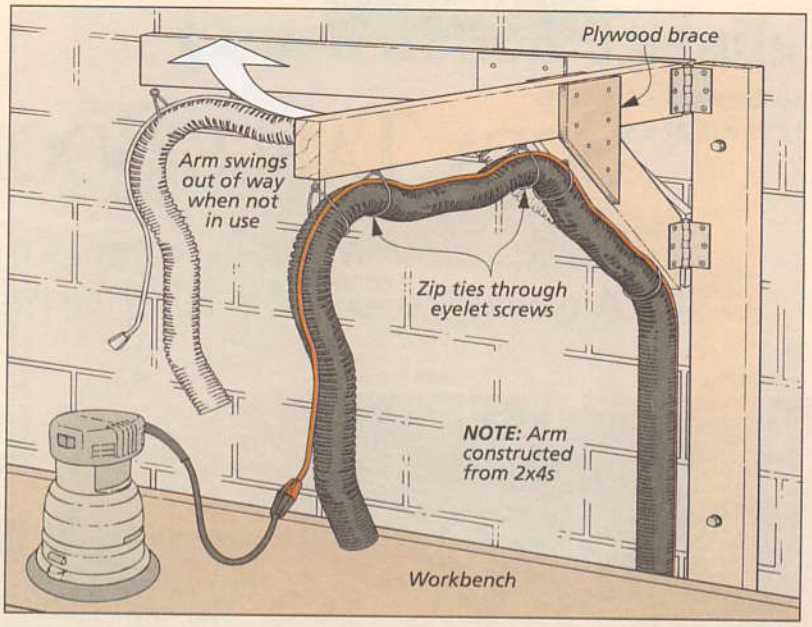

Under-Bench Paper Hanger

Just like in most shops, my workbench gets used for everything from layout to glue-ups to finishing. But I don't want each of these jobs leaving their mark on my bench. So I came up with an easy way to keep a disposable "tablecloth" right at my fingertips.

I found a roll of contractor's paper at the home center and hung it underneath my bench, as you can see in the photo at left.

The paper is suspended on a couple of large hooks, typically used for hanging bicycles up out of the way. The hooks are spaced just far enough apart to allow the roll of paper to turn freely.

I put a dowel through the core of the contractor's paper so it would hang on the hooks like a roll of paper towels.

Now whenever I get ready to do something messy, I just roll out some paper. When I'm done, it's easy to tear off the dirty paper and throw it away.

Craig Lee
Alexandria, Virginia

SUBMIT YOUR TIPS

If you have an original shop tip, we would like to hear from you and consider publishing your tip in one or more of our publications. Just write down your tip and mail it to: *Woodsmith,* Tips and Techniques, 2200 Grand Avenue, Des Moines, Iowa 50312. Please include your name, address, and daytime phone number in case we have any questions. If you would like, FAX it to us at 515-282-6741 or send us an email message at: woodsmith@woodsmith.com. We will pay up to $200 if we publish your tip.

QUICK TIPS

SANDING SLEEVES

I've ruined more than one sanding sleeve and scraped more than one knuckle trying to separate the sleeve from the drum.

I came up with a solution as close as the kitchen. Before sliding the drum onto the sleeve, I rub corn starch on the drum and inside the sleeve. When it's time to change grits, the sleeve is much easier to remove.

Joe Kilijanczyk
Mentor, Ohio

POURING SPOUT

This spout helps water-based contact cement last longer and makes it easier to use since you can pour it while the lid is still on the can.

To make the spout, just remove the lid so you can drill a hole in it. Then epoxy a piece of copper tubing in place. A slip-on copper cap seals the tube for storage.

Bill Jones
Okotoks, Alberta, Canada

FEATURE PROJECT

SOFA TABLE BOOKCASE

A sofa table with built-in storage or a long, low bookcase? Any way you look at it, this is a great project to build.

Setting a narrow table behind a sofa has always seemed like a good idea to me. It's just a nice space for a table lamp and for displaying photos and other items. But many of the sofa tables I've seen have been just that—tables. The space under the top was open and not used in any way.

So instead of a table, this is a sofa table *bookcase*. It's designed to make full use of the space under the top. There's still just as much display space on top of the case (and maybe a little more since the case is a full six feet long). But now, you have much more room for storing books and other display items.

DESIGN OPTIONS. Of course, there's no reason this bookcase has to sit behind a sofa. It'll look great in a variety of settings. In fact, it's a pretty versatile project. And as you can see in the photos at right, its look really changes by adding doors. Or to make the bookcase even more formal looking, you can build it out of cherry. (We'll even give you a sneak peak at what this would look like on our web site, refer to the "On-line Extras" box on page 7.)

STRAIGHTFORWARD CONSTRUCTION. If you're concerned about the difficulty of this project, you needn't be. The joinery is all quite basic. The end assemblies are held together with stub tenon and groove joints. The face frames with half laps. (And there are technique articles for both of these joints on pages 16 and 28.) And believe it or not, when it's time to assemble the case, you won't need a single long clamp.

Construction Details

OVERALL DIMENSIONS:
72"W x 18"D x 30"H

Top overhangs case 2" on all sides

TOP PANEL

FACE FRAME UPPER RAIL

Face frame in back nearly identical to front frame

¼" plywood back panel

Mounting cleat for top panel

End assembly panels are ½" thick

Face frames sandwiched between grooves in end assemblies

¾" shelf panel

BOTTOM PANEL

CENTER STILE

Divider assembly panel is ¾" thick

Divider assembly fits into dado in bottom panel

NOTE: Optional doors shown on page 14

Cleat adds support to bottom panel

Filler strip for exposed groove in stile

End and divider assemblies joined with stub tenons and grooves

FACE FRAME LOWER RAIL

Face frame joined with half laps, refer to article on page 28

NOTE: All panels (except backs) are solid wood

BOTTOM

Groove in face frame allows bottom panel to expand and contract

CLEAT

End assemblies end up slightly proud of face frame

Woodsmith GO ON-LINE EXTRAS

How would this bookcase look in a different wood and with different hardware? You can find out at:

www.woodsmith.com

◄ *The wood-paneled doors here give the bookcase a solid, cabinet-like feel. And they're easy to build and mount to the case.*

Reeded-glass panels ► *soften the look and give a hint of what's inside the bookcase. You'll find out how easy these doors are to build on page 14.*

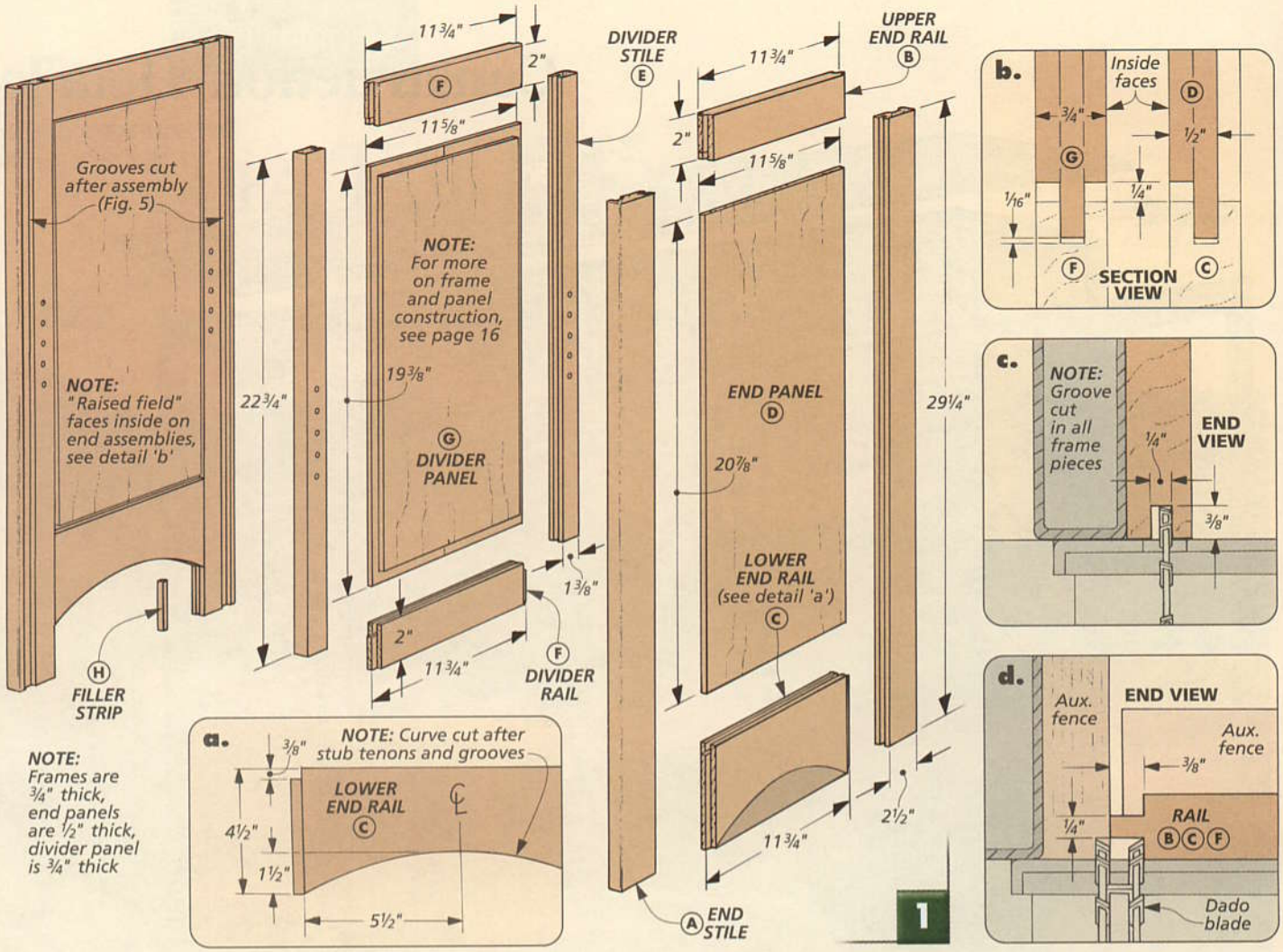

End & Divider Assemblies

For this bookcase, I decided to build the two end assemblies and the divider assembly at the same time, as you can see in Fig. 1. The joinery is the same, so you can save yourself a lot of set-up time. But the dimensions of the divider pieces are slightly different, so you have to keep the pieces organized and labeled clearly.

FRAMES. The first thing to do is cut the frame pieces to size, as in Fig. 1. The *end stiles (A)* and *divider stiles (E)* are different in width and length, but the *upper (B)* and *lower end rails (C)* and the *divider rails (F)* are all the same length (11¾").

STUB TENONS & GROOVES. With the frame pieces cut to size, you can work on the stub tenons and grooves that join the frames. This is basic frame and panel construction. The only thing to mention is that since the panels are going to be solid wood (instead of ¼" plywood), the grooves (and tenons) can be cut a full ¼" wide, as indicated in Figs. 1c and 1d. (For some step-by-step instructions on frame and panel construction, turn to page 16.)

SOLID WOOD PANEL. With the stub tenons and grooves cut, you can glue up the panels that fit inside these frames. From the outside, these are flat, inset panels, as you can see in the margin photos at right. But I did not want to end up with large gaps between the shelves and the inside of the case, so the ½" thick solid wood *end panels (D)* have a "raised field" on their inside faces (Fig. 1b). And since the *divider panel (G)* needs to be flush with both faces of its frame, it is ¾" thick and has the "raised field" on both faces.

RABBET. However, these aren't traditional raised panels. The "raised field" is created by cutting rabbets, as in Fig. 2. These form the tongues that fit into the grooves in the frame pieces. (The rabbets are actually extra wide, so the panel ends up

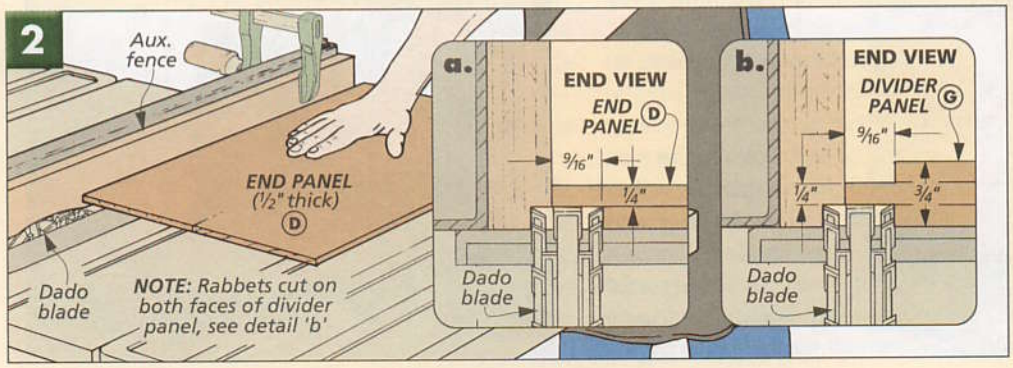

with a 1/4" shadow line around its "raised field.") And when it's time to cut the rabbets on the 3/4"-thick divider panel, double-check the height of the blade to make sure the tongue is going to fit in the grooves.

LOWER END RAIL. Before you begin gluing up the assemblies, there's one more thing to do — cut a curve on the bottom edge of the lower end rails (Fig. 1a). To lay out this curve, I bent a narrow strip of 1/8" hardboard and traced it on the rail. Then the curve can be roughed out with a band saw or sabre saw and sanded smooth. (I used a drum sander.)

ASSEMBLY. These assemblies are really quite straightforward. But there are a couple of things to note. To "lock" the panel in place while still allowing it to expand and contract, I placed a small dab of glue in the groove at the center of each rail. Then with all three assemblies, I inserted 1/4"-thick spacers between the panel and frame, as shown in Fig. 3. This kept the "raised field" of the panel centered in the frame opening until the glue dried.

For the end assemblies, I focused on the top edges, making sure they were flush. Then as the glue was drying, I cut small *filler strips (H)* to fill the grooves below the lower rails, as indicated in Figs. 3 and 3b. You can either glue them in flush or leave them a little long and trim them with a handsaw and sand them flush with a sanding block.

ODDS & ENDS. There are a few odds and ends left to do before these assemblies are complete. First on the end assemblies, I routed 1/16" chamfers on all the edges (except for the top edges), as in Fig. 4.

Next, I cut 1/4"-deep grooves along the front and back edges of the end assemblies. (I did this at the table saw, as in Fig. 5.) These grooves should be wide enough to hold the 3/4"-thick face frames later on.

Finally, lay out and drill the holes for the shelf pins, as in Fig. 6. The holes in the end assemblies are 3/8" deep. But the holes in the divider go all the way through.

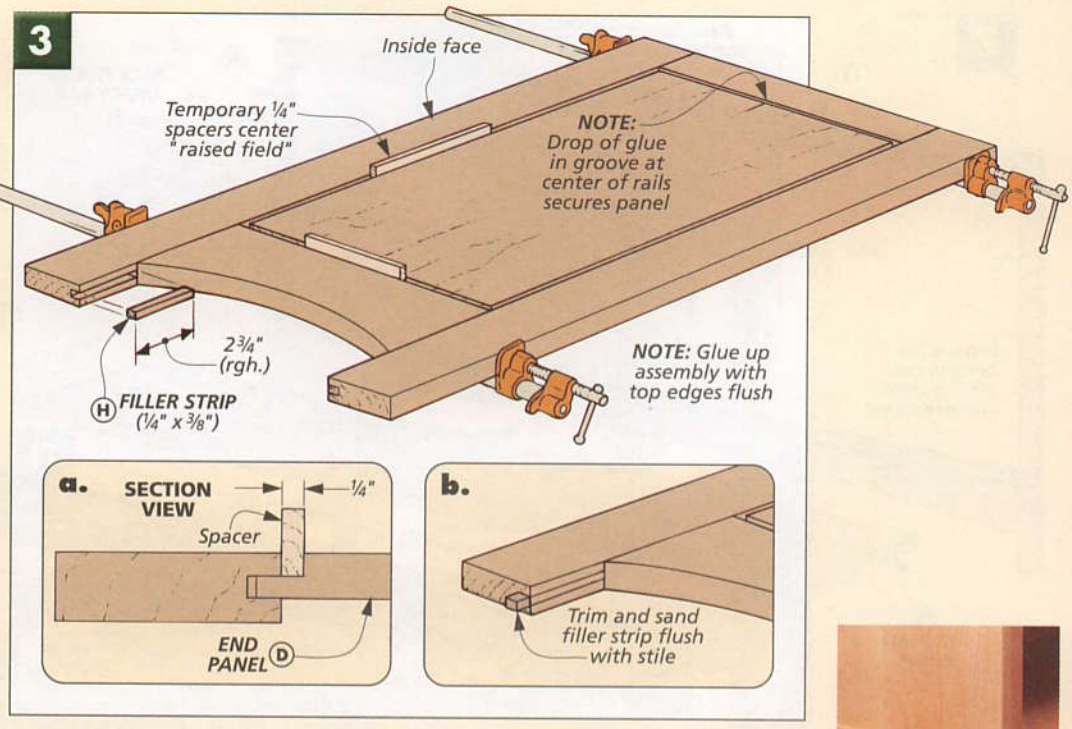

▲ *From the outside, these look like flat panels...*

▲ *...but their inside faces have been rabbeted so that the frames and panels are flush inside the case.*

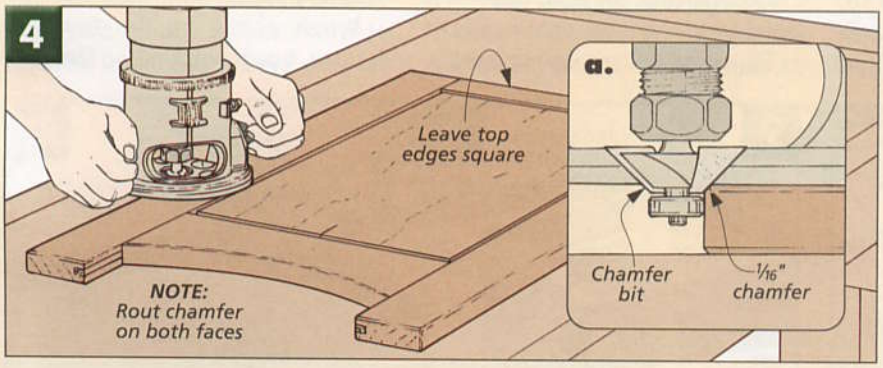

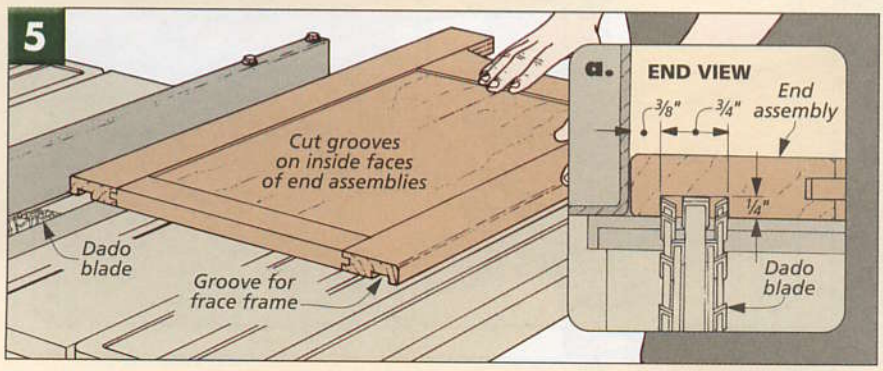

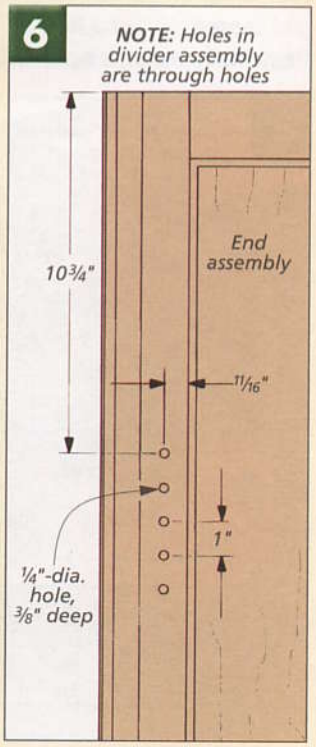

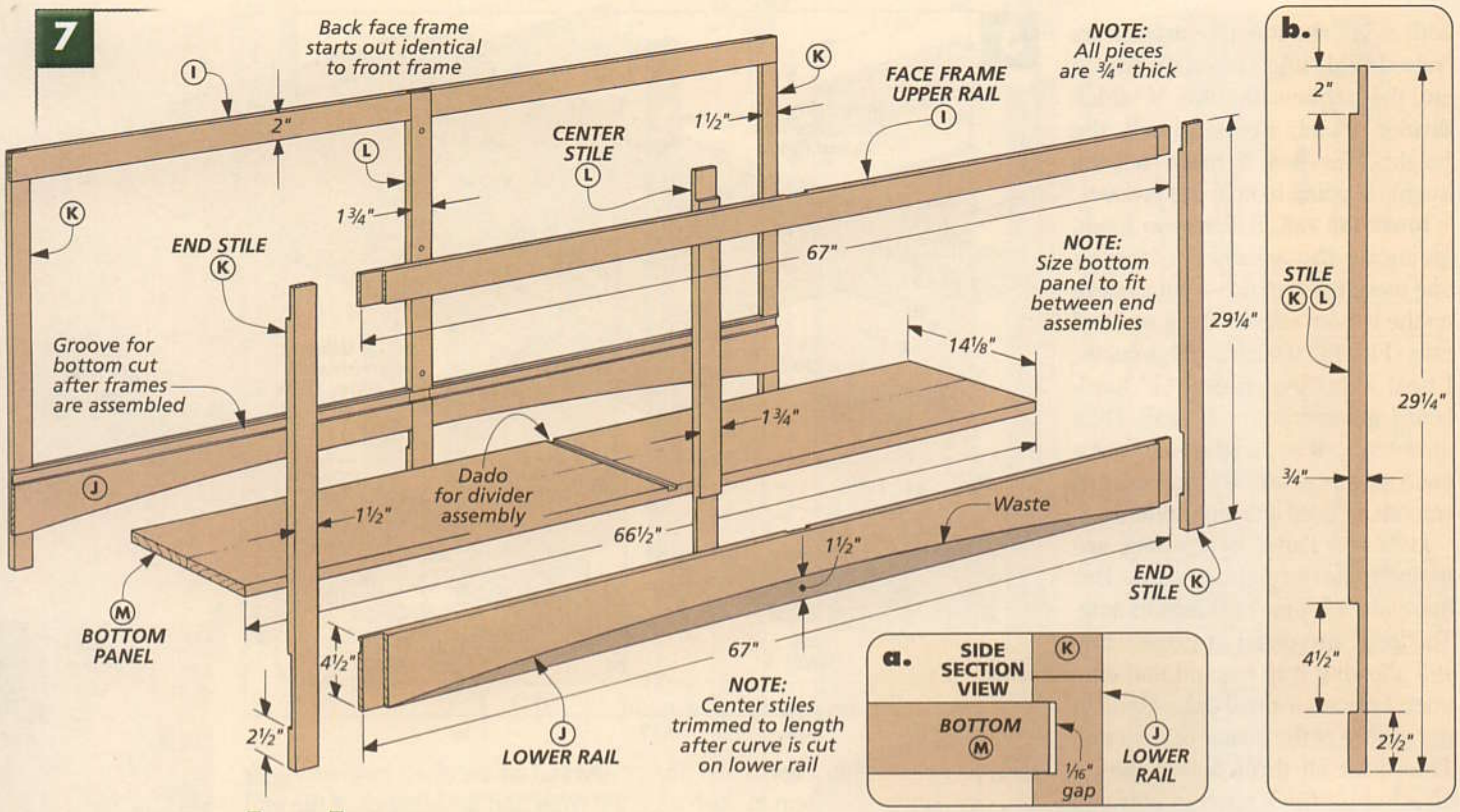

Face Frames

At this point, the end and divider assemblies can be set aside while you work on the face frames that will be sandwiched between the assemblies.

RAILS AND STILES. The first thing to do is cut the frame pieces to size, as in Fig. 7 above. You'll need two *upper (I)* and two *lower rails (J)*. And when cutting the *end stiles (K)* and *center stiles (L)* to size, I made them all the same length (29¼"), as in Fig. 7b. The final length of the center stiles will depend on the curves you'll cut in the lower rails, but making them all the same length now will save you an extra setup when working on the half laps next.

HALF LAPS. The half laps that join the face frames include end laps and cross laps (Fig. 9). Both can be cut quickly on the table saw, as shown in Fig. 8 and the article on page 28.

LOWER RAIL CURVES. With the half laps cut, you can create the curve on each lower rail just like the end assembly rails. Only this time, I saved a small section of the cutoff piece. Then after assembly, you can trace and cut the curve on the center stile (Fig. 9a) and use the cutoff to sand the stile flush (Fig. 9b).

When gluing up the two face frames, I concentrated on the rails

▲ *As woodworking joints go, half laps are pretty basic. But cutting them on long pieces can be a challenge. Turn to page 28 for a few tips you can use when building these face frames.*

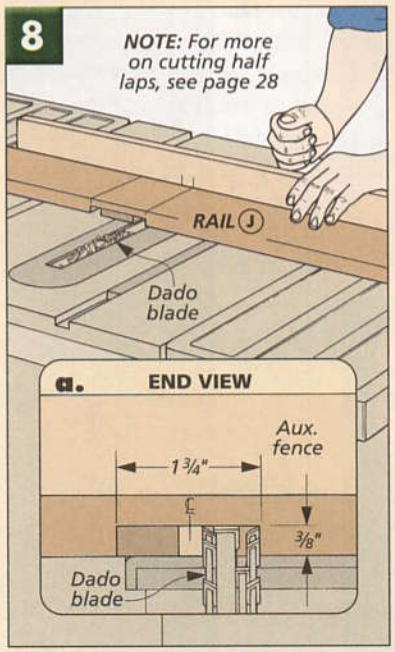

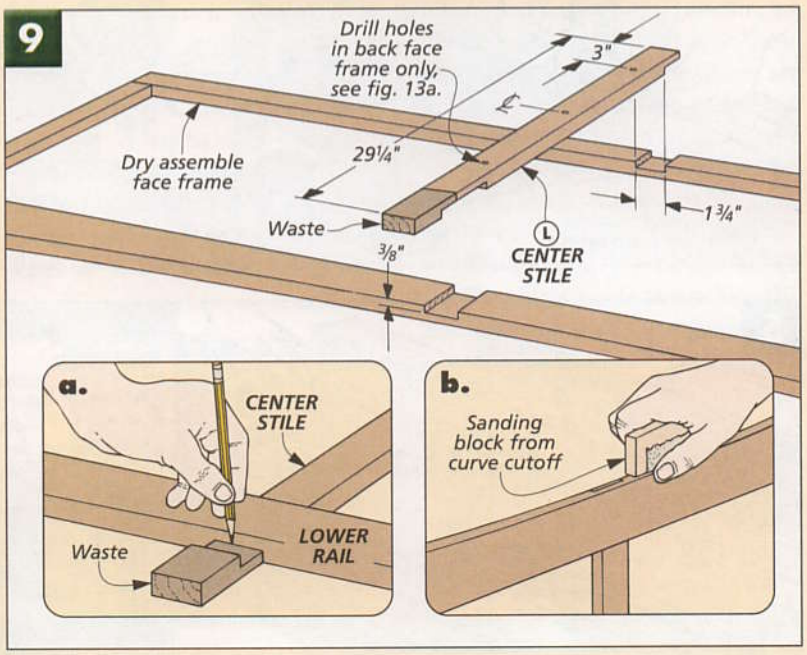

and end stiles first. Then you can glue the center stiles in place.

BOTTOM PANEL. Next I began gluing up the *bottom panel (M)*, as shown in Fig. 7. This is a long panel, so to help keep the pieces aligned, you may want to use splines or biscuits.

When cut to length, the panel should fit between the end assemblies, and it's best to dry assemble the case for this measurement. (To see how I did this, turn to page 21.)

To find the panel's width, first measure between the face frame grooves on an end assembly. Then cut the panel 3/8" *wider* so it'll fit into 1/4"-deep grooves that will be cut in the face frames (Figs. 7a and 11).

The last step for the bottom panel is to cut a centered dado 1/4" deep to hold the divider assembly. To do this, I used the table saw with an auxiliary miter gauge fence to support the piece, as shown in Fig. 10.

Now there are just two steps left before the case can be assembled. First, I cut a groove along each lower rail to hold the bottom panel, as you can see in Fig. 11. Then on the back face frame, I routed 3/8"-wide rabbets to hold the 1/4" plywood backs later, as in Fig. 12.

CASE ASSEMBLY. I put the case together in two stages, starting with the assembly on its back. First, the back face frame is clamped between the end assemblies. Then you can add the bottom panel (without glue) and the upper face frame.

Before the glue dried, I set the case upright and started on the second stage, as in Fig. 13. All you need to do here is add the divider assembly, but the dado in the bottom is the only thing that positions the divider. So I used a square to make sure the divider was vertical. Then I secured it with screws through the back and the bottom. (Use only a single, centered screw in the bottom so the bottom can expand and contract.)

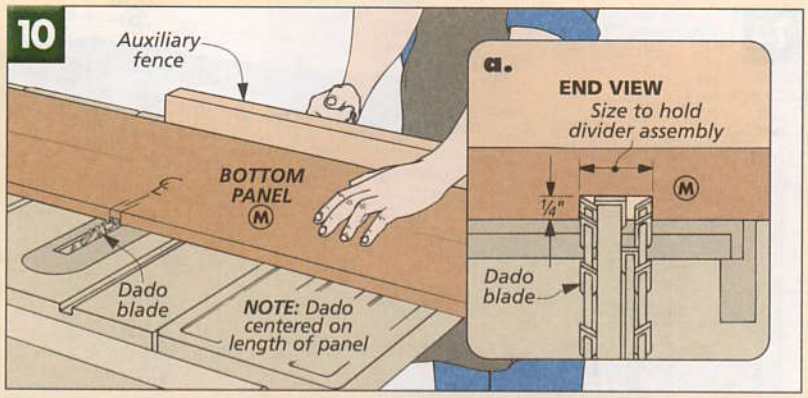

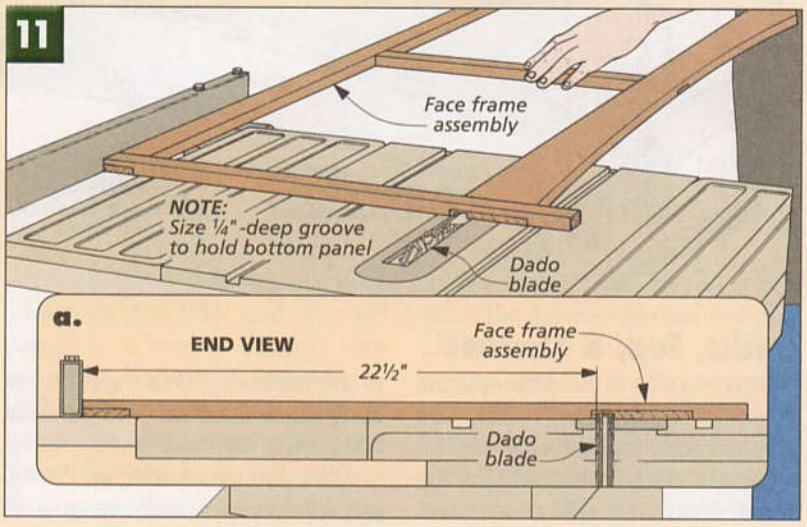

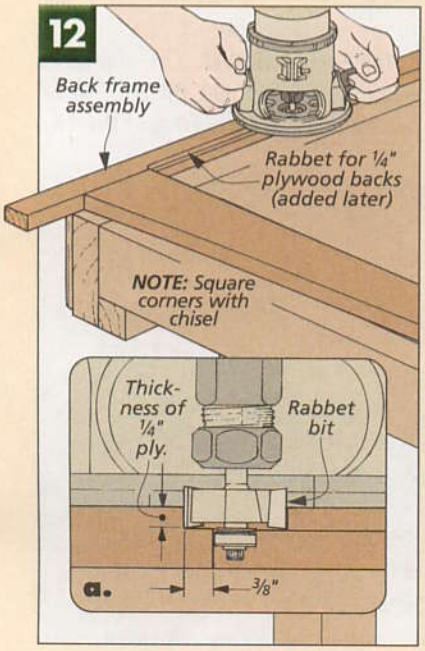

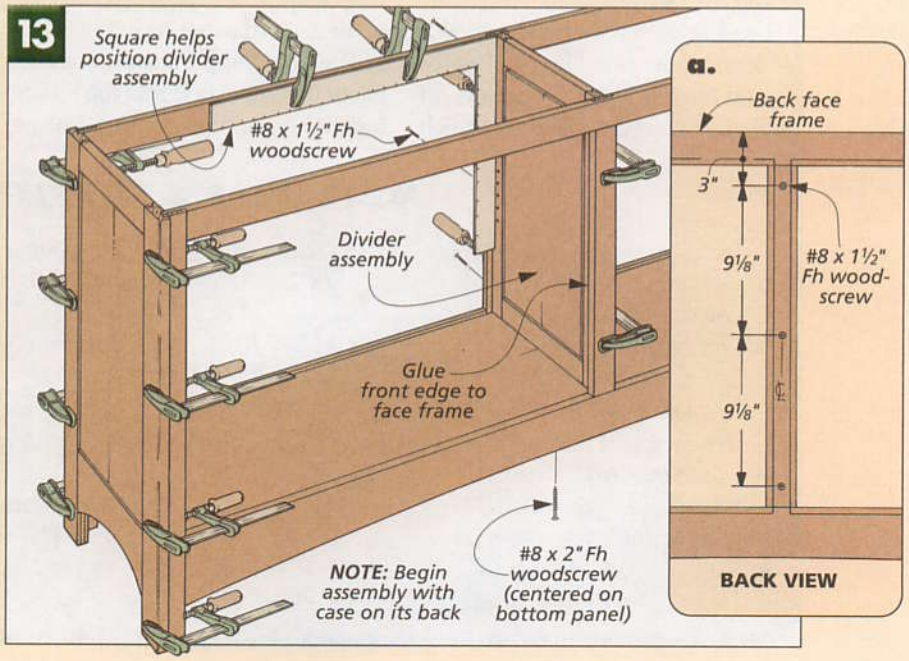

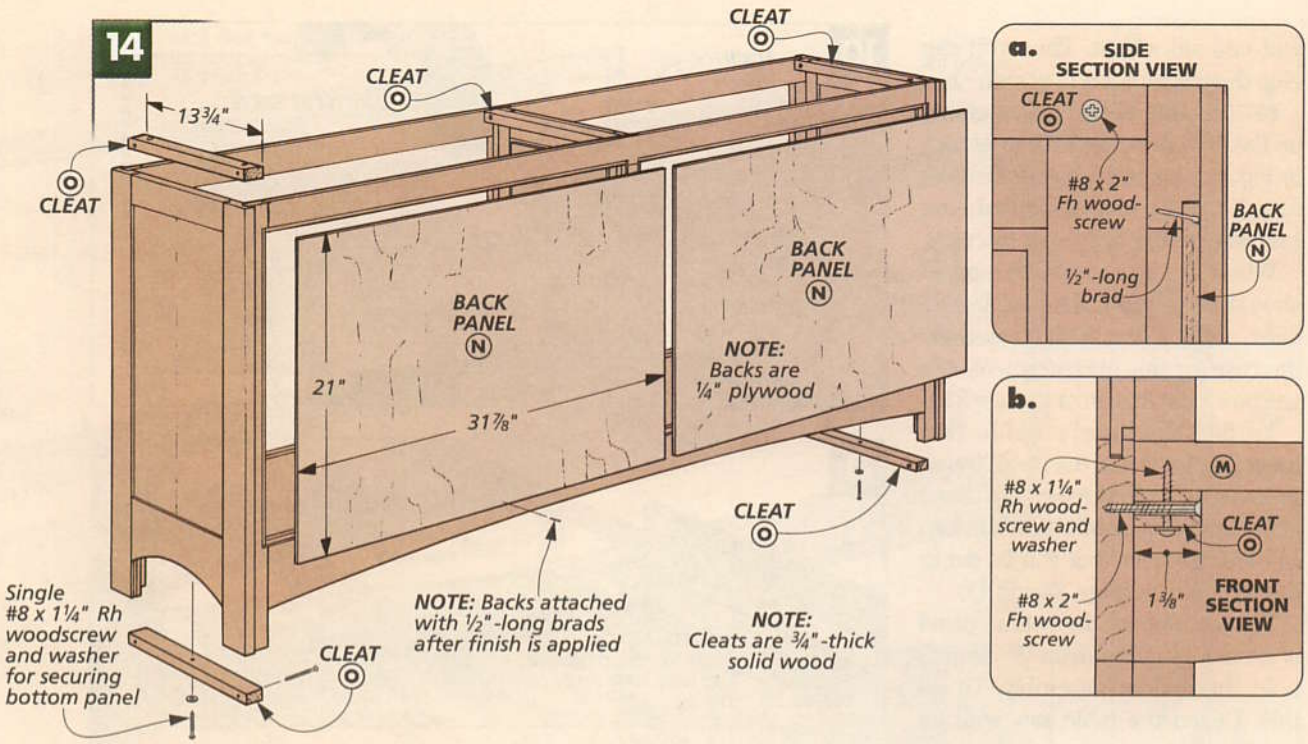

Backs, Top, & Shelves

Unless you plan to build the optional doors (page 14), all that's left to add are the backs, top, and shelves. The two backs are ¼" plywood. The top and shelves are ¾" solid wood panels.

BACK PANELS. The back panels fit into the rabbets already cut in the back face frame. (The rabbets had to be routed before assembly because the overlapping end panels prevent you from routing them after assembly.) As you can see in Fig. 14, I simply cut the *back panels (N)* to fit into the rabbets.

The backs will be attached with ½"-long brads, as in Fig. 14a. But it's a good idea to leave the panels off until after you've applied the finish to the bookcase. This way, you can apply the finish from both the front and back of the case.

CLEATS. Before working on the top panel, I decided to add some mounting *cleats (O)*, as shown in Fig. 14. These cleats are simply 1⅜"-wide pieces cut to fit between the two face frames inside the case.

I made five cleats in all. Three will secure the top panel. (The center cleat can be attached to either side of the divider assembly.) The other two cleats add support to the ends of the bottom panel, as in Fig. 14b.

The only thing I need to mention about these cleats is that the mounting holes for the top and bottom panels aren't exactly the same. The bottom panel is trapped at the front and back by the grooves in the face frames. So the bottom cleat gets a single, centered mounting hole.

On the other hand, the top panel just rests on top of the case. So to secure this panel and help hold it flat, I drilled mounting holes at the ends of each cleat, as in Fig. 15b. Just be sure that these holes are oversized so the solid wood panel will still be able to expand and contract freely. (I drilled 5/16"-dia. mounting holes here.)

TOP PANEL & SHELVES. The last bit of work to do is to make the solid wood panels for the *top (P)* and the two

MATERIALS & SUPPLIES

A End Stiles (4)	¾ x 2½ - 29¼	**M** Bottom Panel (1)	¾ x 14⅛ - 66½
B Upper End Rails (2)	¾ x 2 - 11¾	**N** Back Panels (2)	¼ ply. - 31⅞ x 21
C Lower End Rails (2)	¾ x 4½ - 11¾	**O** Cleats (5)	¾ x 1⅜ - 13¾
D End Panels (2)	½ x 11⅝ - 20⅞	**P** Top Panel (1)	¾ x 18 - 72
E Divider Stiles (2)	¾ x 1⅜ - 22¾	**Q** Shelves (2)	¾ x 13⅝ - 32¾
F Divider Rails (2)	¾ x 2 - 11¾		
G Divider Panel (1)	¾ x 11⅝ - 19⅜	• (11) #8 x 2" Fh Woodscrews	
H Filler Strips (4)	¼ x ⅜ - 2¾ rgh.	• (3) #8 x 1½" Fh Woodscrews	
I Face Frame Upper Rails (2)	¾ x 2 - 67	• (8) ¼" Spoon-style Shelf Pins	
J Face Frame Lower Rails (2)	¾ x 4½ - 67	• (8) #8 x 1¼" Rh Woodscrews	
K Face Frame End Stiles (4)	¾ x 1½ - 29¼	• (8) #8 Flat Washers	
L Face Frame Center Stiles (2)	¾ x 1¾ - 29¼	• (1 pkg.) ½"-Long Brads	

NOTE: Materials and supplies for optional doors are listed on page 15.

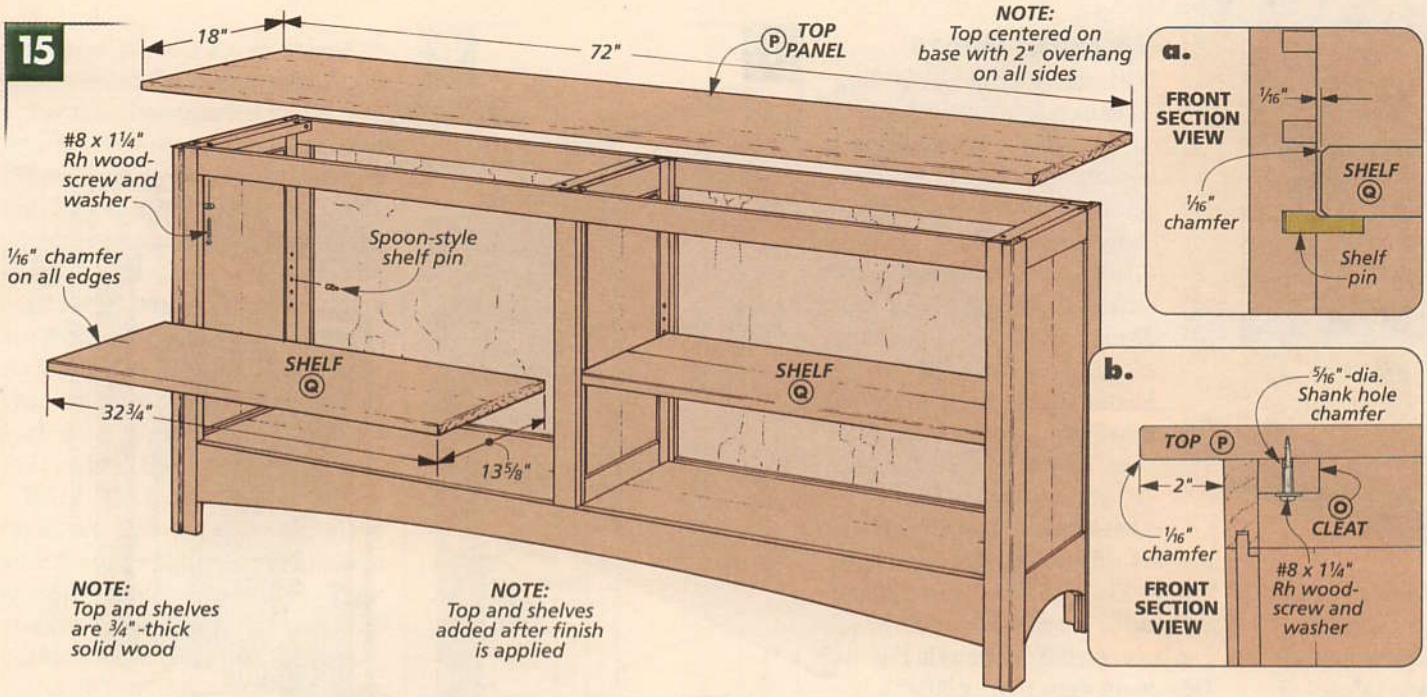

shelves (Q), as you can see in Fig. 15. Like the bottom panel, using kerfs or biscuits to keep everything aligned will probably save you some planing or sanding later on. And when you have the panels flat and cut to length, all that's left is to rout a 1/16" chamfer on all their edges, as indicated in Figs. 15a and 15b.

The shelves simply rest on spoon-style shelf pins (Fig. 15a). The top panel is screwed through the mounting cleats you added earlier.

But before adding either of these to the case, you'll want to build the doors. That's because doors are easier to mount if you have access from the top. Plus, it's generally best to apply the finish before you attach either the doors or the top. (I simply brushed on several thin coats of a varnish, but you could use a polyurethane or water-based finish too.) In fact, the top will be less likely to warp if you apply the same number of coats to the underside of the panel before screwing it in place.

CUTTING DIAGRAM

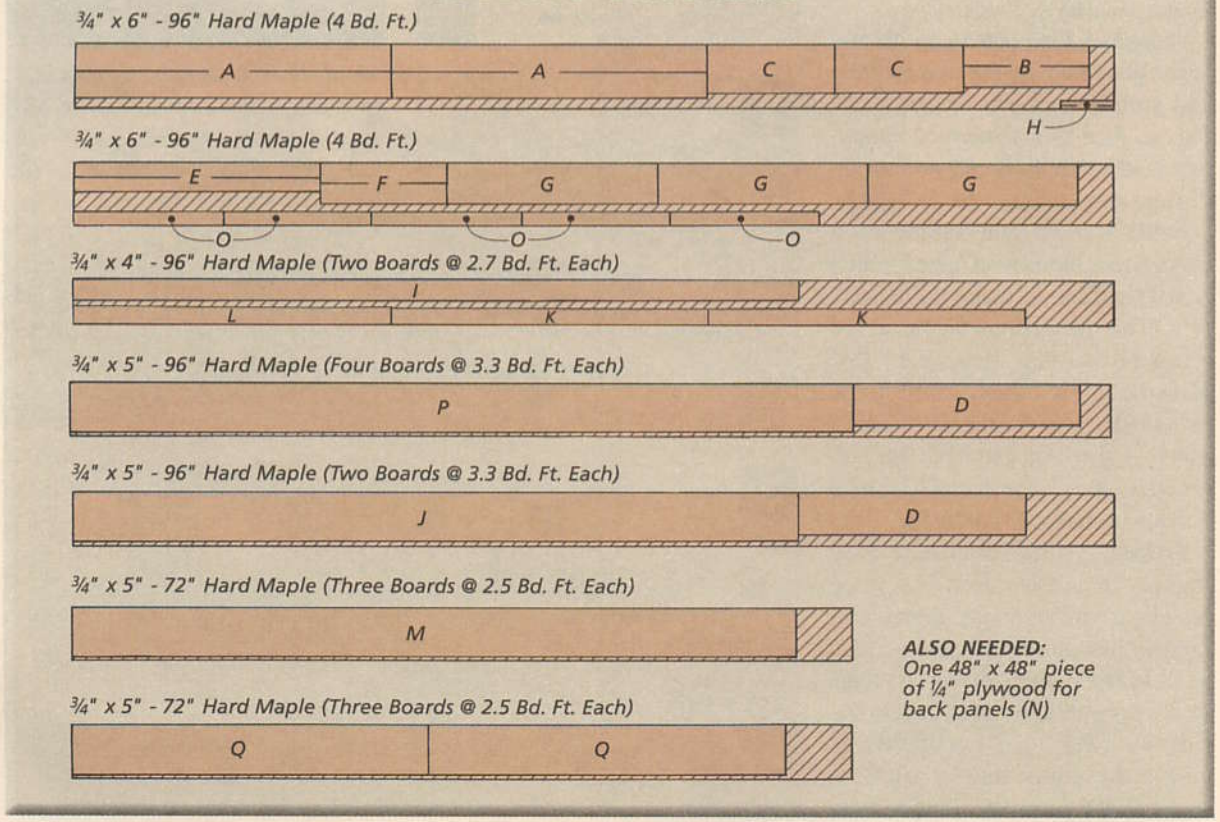

▲ *These doors are easy to build whether you use glass (above) or wood (page 7) for the panels. The doors here feature 3/16"-thick reeded glass that was purchased at a local glass shop.*

Optional Doors

With many projects, adding doors increases the level of complexity. The joinery is different from the rest of the project, and getting the doors mounted correctly can be tricky.

Not here. These doors are built just like the end and divider assemblies you made earlier. And when it's time to mount them, you'll find that these overlay doors are relatively easy to attach to the case — but more on that later.

FRAME PIECES. To build the doors, the first thing to do is work on the frame. They're sized to overhang the case 1/4" on each edge with a 1/16" gap between the doors, as in Fig. 1b. (My doors were 15 3/4" x 20 3/4".)

The length of the *stiles (A)* is easy to come up with. Just add 1/2" to the height of the case opening. The *rails (B)* are a bit more work. You have to take into account the widths of all four stiles, the stub tenons on the rails, and the 1/4" that the door overlaps the case. (At this point, I didn't worry about the 1/16" gap between the doors. I like to trim the edges between doors after they've been mounted to the case.)

GROOVES & STUB TENONS. With the frame pieces cut to size, the grooves and stub tenons can be cut, as in Fig. 1a. And as I mentioned earlier, this is identical to those you cut on the end assemblies, refer to page 8.

PANELS. If you're building the wood panel doors (shown on page 7), then now's the time to make the *panels (C)*. (The dimensions for these are given in the margin at left.) For glass doors, it's best to order the glass *after* the frames have been assembled so you can have the panels cut to match the actual openings (minus 1/8" in each direction).

ASSEMBLY. At this point, the door frames can be assembled (and wood panels, if you're using them). But before installing the doors, you need to cut rabbets on three edges of the door to allow it to fit into the case, as in Fig. 2. (The center edges where the doors meet should be square.) It's probably good to note

WOOD PANEL OPTION

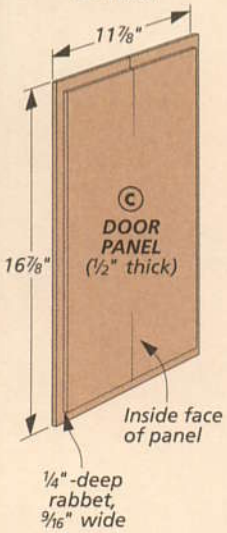

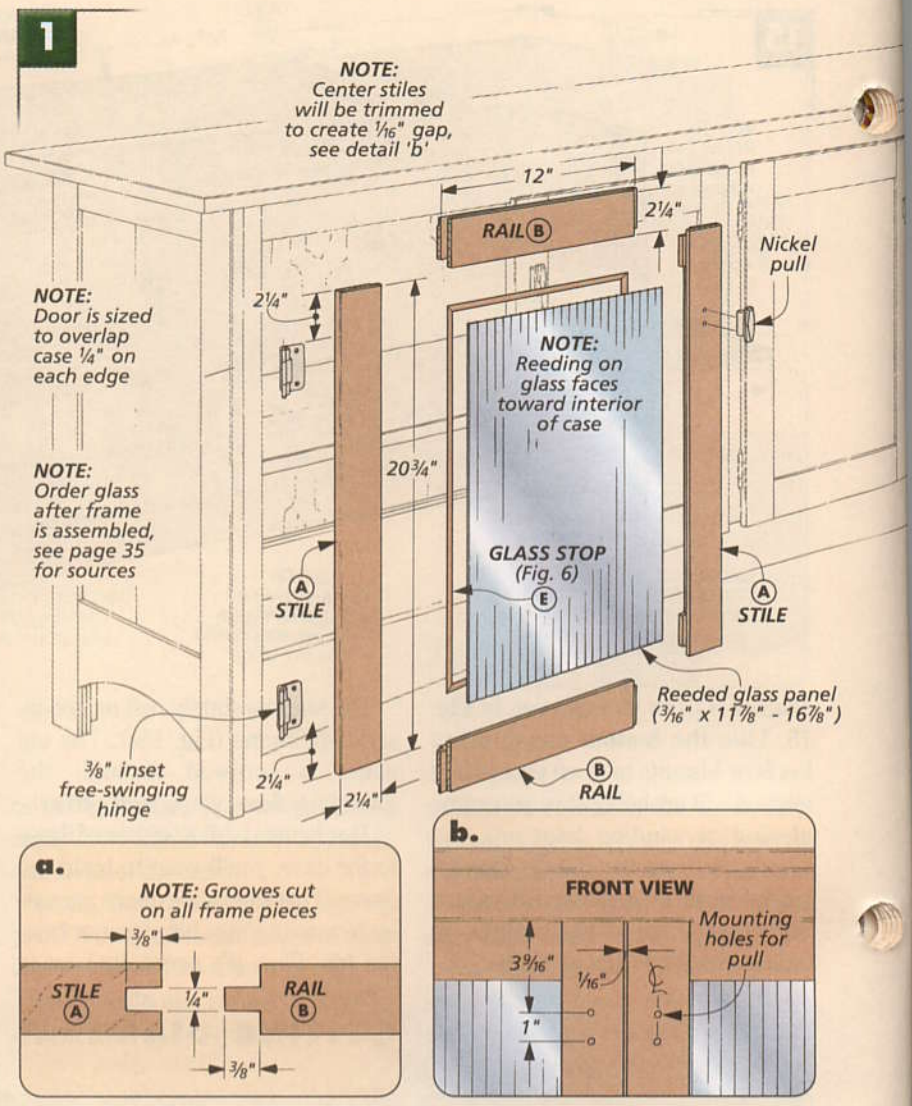

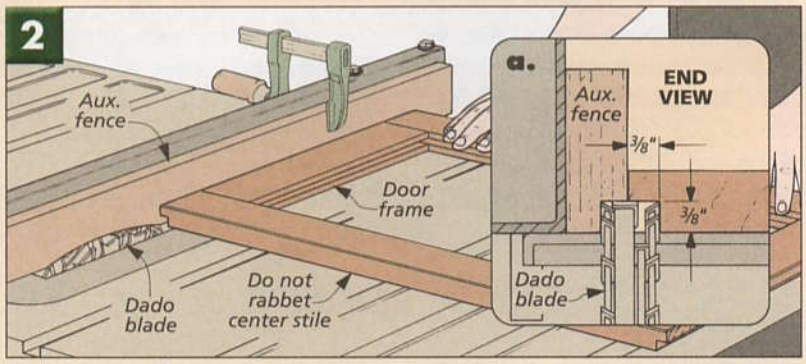

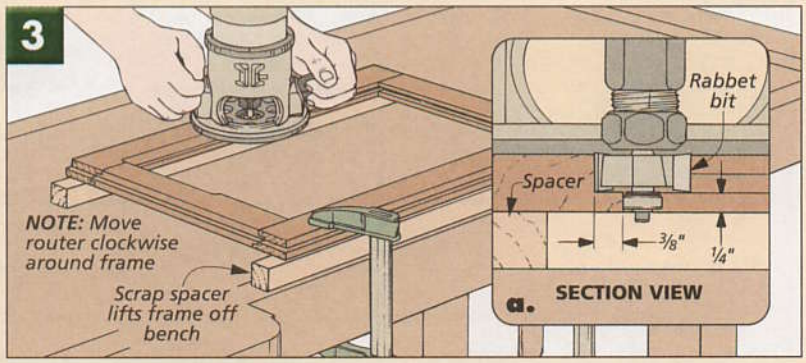

that these rabbets are oversized so there's some "breathing room."

For the glass-paneled doors, you also need to rout a rabbet around the inside of the frames, as shown in Fig. 3. This just removes the inside shoulder of the groove, so you can install the glass later (Fig. 3a).

MOUNTING DOORS. Now the doors are ready to be mounted to the case. As you can see in Fig. 4, I set the case on its back so I could just lay each door in place. Then I marked the center of the case opening.

After attaching the hinges to a door, set it on the case and make sure the gaps at the top and bottom are the same, as in Fig. 4b. Then you can reach inside and mark the position of the hinges on the case.

But before removing the door, take a minute to lay out a few marks. First, you can transfer the center of the case to the door stile (top and bottom). This will help you create the gap between the doors later on. Second, it's also a good idea to mark the position of the door on the case, as in Fig. 4b. This way, it'll be easy to align the second door to the first.

After you've trimmed the center stile of each door, you can chamfer the edges of the doors (Fig. 4a). Then the finish can be applied, and the hardware added. The magnetic catches are mounted to a small *cleat (D)* that's glued into the case, as in Fig. 5. The glass is held in place with small pieces of *glass stop (E)*, as shown in Fig. 6. And finally, the knobs can be added to the inside stiles (Figs. 1 and 1b).

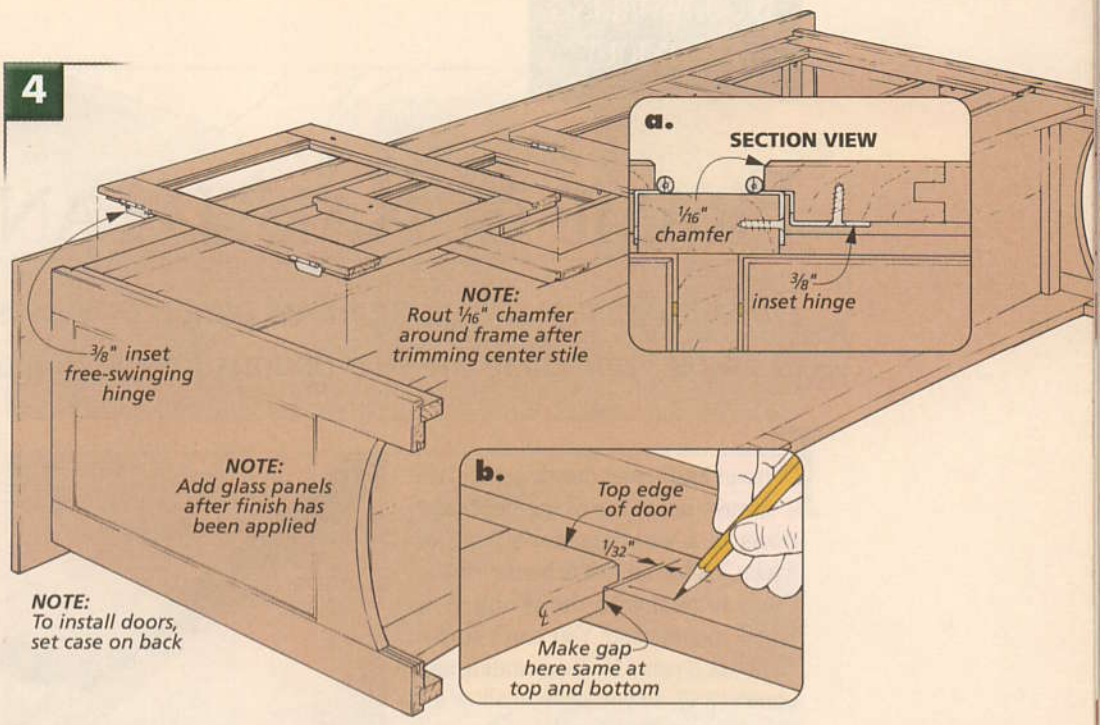

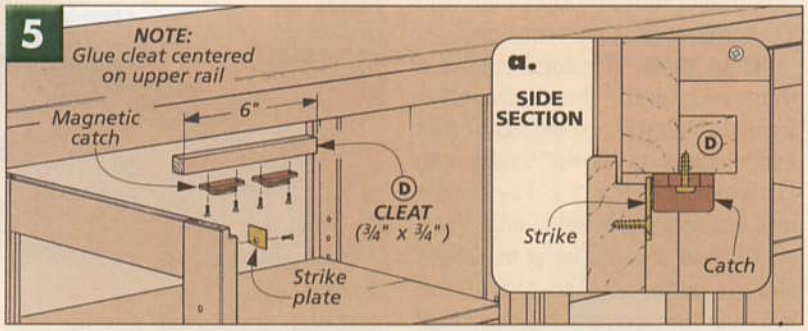

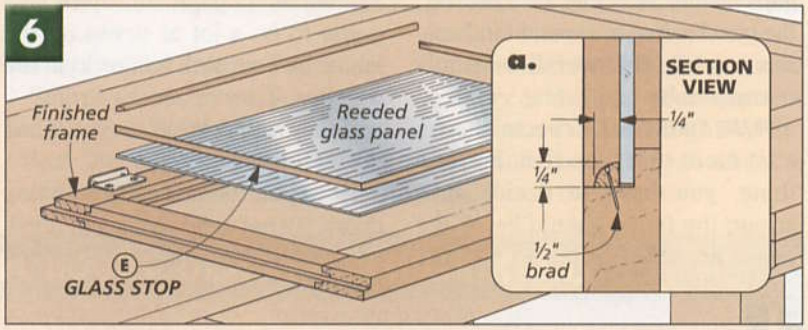

▲ *Nickel hinges are hard to come by, so for this bookcase, I bought brass hinges, scuffed them with 400-grit sandpaper, and spray painted them silver.*

MATERIALS, SUPPLIES & CUTTING DIAGRAM

A Door Stiles (8)	3/4 x 2 1/4 - 20 3/4	• (4 pr.) 3/8" Inset Free-Swinging Hinges (painted silver)
B Door Rails (8)	3/4 x 2 1/4 - 12	• (4) Satin Nickel Door Pulls
C Door Panels (4)*	1/2 x 11 7/8 - 16 7/8	• (4) Magnetic Catches, Strikes, & Screws
D Door Catch Cleats (2)	3/4 x 3/4 - 6	• (1 pkg.) 1/2"-Long Brads**
E Glass Stop**	1/4 x 1/4 - 260 In. in.	• (4) 3/16" x 11 7/8" - 16 7/8" Reeded Glass Panels**

* Needed for Wood-Paneled Doors

** Needed for Glass-Paneled Doors

3/4" x 6" - 96" Hard Maple (4 Bd. Ft.)

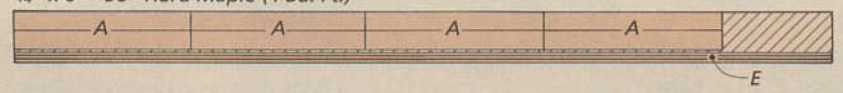

3/4" x 5" - 60" Hard Maple (2.1 Bd. Ft.)

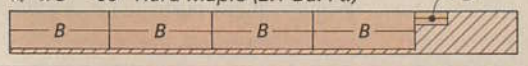

1/2" x 5" - 60" Hard Maple (Four Boards @ 2.1 Sq. Ft. Each)

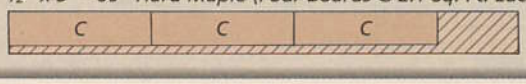

FRAME & RAISED PANELS

Build professional-looking raised panels in your shop? You bet. The frame is simple, and there are two options for making the raised panels.

Frame and panel construction has always been one of the best solutions in a woodworker's "bag of tricks." After all, what better way is there to deal with the problem of wood movement? You can't stop a solid-wood panel from expanding and contracting, so you have to allow for this movement — otherwise, the joints will work loose over time.

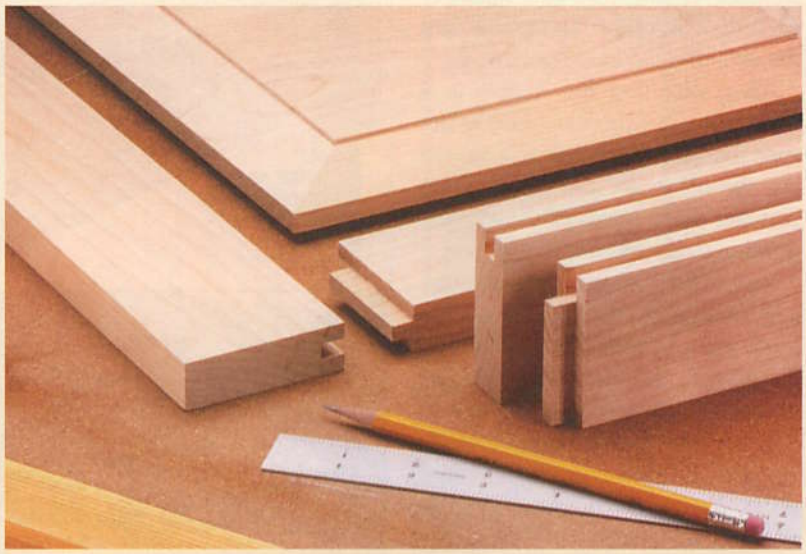

DESIGN NOTES. The idea behind a frame and panel is simple enough. A frame is built with grooves cut on its inside edges, as shown in the photo at right and in Fig. 1 below. These grooves trap the beveled edges of a solid-wood panel. The panel is cut slightly smaller than the depth between the grooves, leaving small gaps inside, as in Fig. 1a. This way, the panel is free to expand (and contract), while the overall assembly remains stable and strong.

FRAME STRENGTH. Of course, there's a bit more to it than that. For one thing, you have to decide how strong the frame should be. When the assembly is going to become part of a box or case (like the storage tables on page 30), there isn't going to be a lot of stress on the joints. So I cut stub tenons to fit the grooves. They're plenty strong — and they're quick too, as you'll find out on the next page.

However, when you're building doors, it's not quite so cut and dried. There can be a lot more pressure on the hinged side of the frame, and you might want to consider building a frame that's stronger. (Refer to the box on the next page.)

PANEL. The other thing you need to consider is the style of raised panel that you're after. If you like the look of a flat bevel (as shown in the photo above), then you can do all the work of creating the raised profile at the table saw. Or to really dress up the panel, you can buy a raised-panel bit with a curved profile and do the work at the router table. (More on that on page 19.)

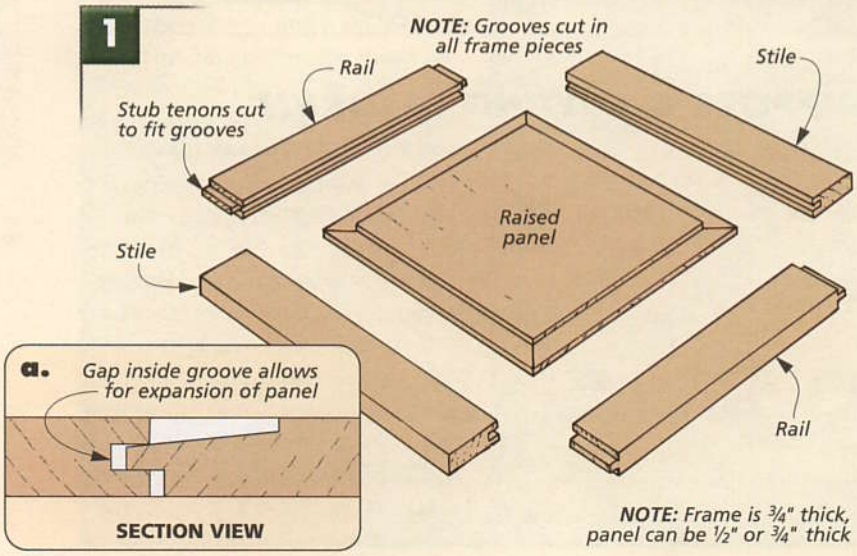

FRAME

When building a frame and panel assembly, I generally like to start with the rails and stiles of the frame. And often, I'll build this frame with stub tenon and groove joints.

GROOVES. After the frame pieces have been cut to size, the first thing to do is cut the grooves, as shown in Fig. 2 above right. These grooves are centered on the inside edges of all four frame pieces. (Centering the

grooves makes the stub tenons easier to cut later.) And when working with solid-wood panels, I cut these grooves so the stub tenons could be cut a full 3/8" long.

Maybe you've noticed by now that I cut the 1/4"-wide grooves with a regular blade (Fig. 2). You could use a dado blade, but you'll spend more time centering it. Instead, I start with the blade roughly centered on the piece. Then I cut each groove in two passes, flipping the piece end-for-end before the second pass. This automatically centers the groove.

Usually, I will have to bump the fence over and repeat this process to get the groove close to 1/4" wide. But the width doesn't have to be exact. It's easy enough to sneak up on the size of the stub tenon later.

STUB TENONS. When the grooves have been cut, the two stiles of each frame can be set aside while you cut the stub tenons on the ends of the rails. I like to cut each shoulder in a single pass over a dado blade, as shown in Fig. 3. But you could do this in a few passes over a regular blade. Either way, you'll want to support the pieces with an auxiliary fence screwed to the miter gauge.

To set up the cut, I use one of the grooves I just cut. First, the saw blade is raised to match the shoulder of the groove, as in Fig. 3a. Then the fence can be positioned so the length of the tenon will match the full depth of the groove (Fig. 3b).

Still, you'll want to test your setup. In fact, you'll probably need to adjust the height of the blade. I shoot for a friction fit, which means the pieces need to be pressed together with hand pressure. But don't make the fit too tight, or the stub tenons can end up breaking the shoulders of the grooves.

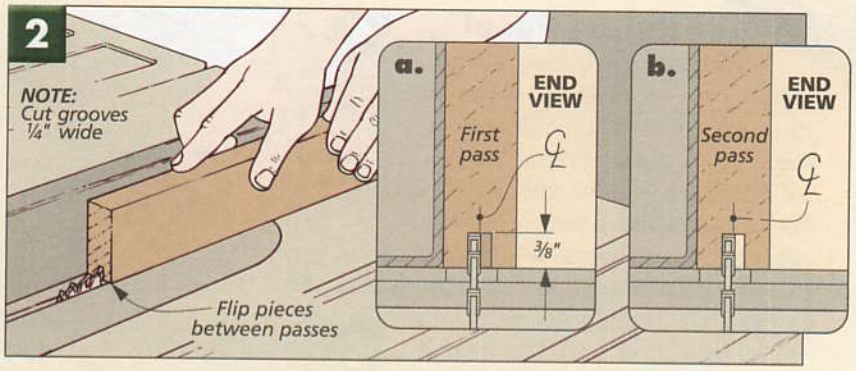

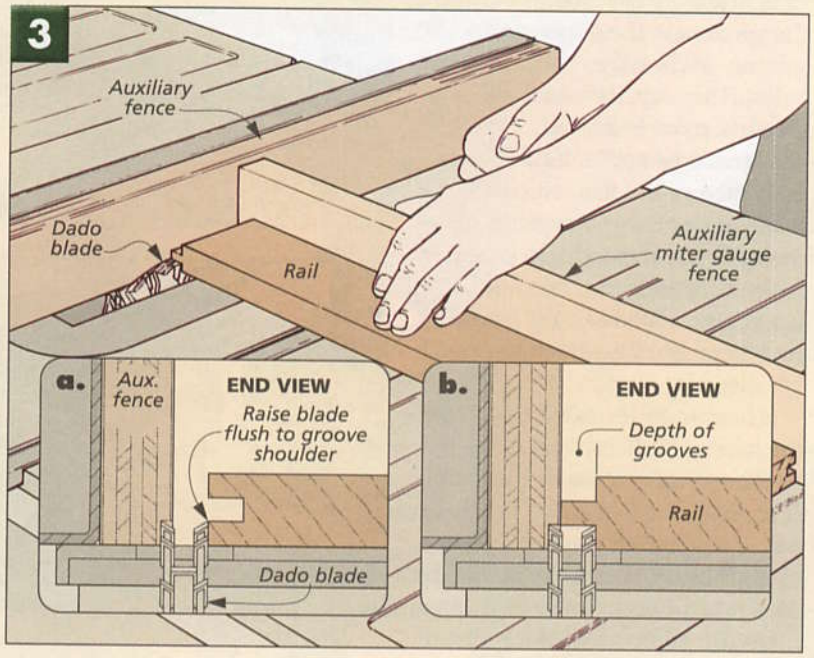

THE BEST BLADE FOR THE JOB

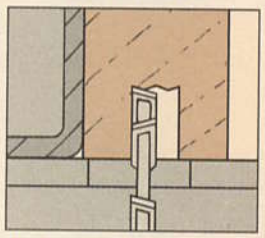

▲ *A saw blade with beveled teeth will cut a groove that ends up with tiny gaps after the stub tenon has been glued in place.*

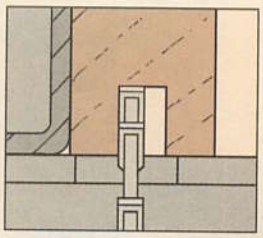

▲ *A saw blade that cuts a flat-bottomed kerf will give you the best fit when it's time to glue the stub tenon into the groove.*

RAISED PANEL DOORS: DESIGN CONSIDERATIONS

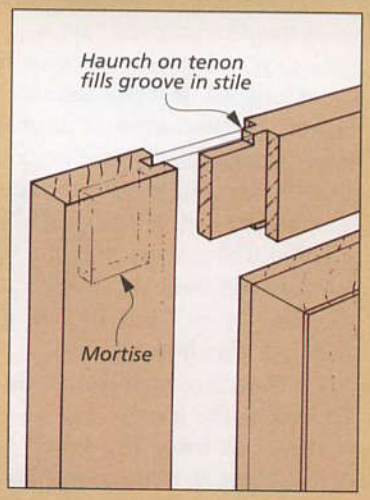

When you're building a door, you have to make sure it's going to carry its own weight. You don't want to end up with a door that falls apart.

SMALL DOORS. Small doors, like the optional ones on the bookcase (page 6), are small enough that you can still use stub tenon and groove joinery. (The glue will be plenty strong to hold it together.)

LARGE DOORS. However, if the door is much larger (especially if it has a glass panel), then you're better off with a stronger frame. I'd recommend a haunched mortise and tenon, as shown at left. Here, the tenon has an extra shoulder (haunch) to fill the groove in the stile. (Step-by-step instructions for this joinery are available on our web site. For details turn to page 35.)

SAW BLADE. Since a frame's joinery may be seen at the top and bottom of the door, there's one more thing to note. If you use a blade with beveled teeth, you'll end up with tiny gaps after assembly, see margin. So I use a blade that cuts a flat-bottomed kerf.

▲ *A flat-beveled, raised panel is easy to create with just a table saw and a simple, shop-made sled.*

Raised Panel

With the frame pieces complete, it's time to work on the panel. Before, the goal was to end up with a strong frame. Now the focus is on the look of the panel. After all, this panel is going to get all the attention, so when gluing it up, you want to take care that the grain matches well.

PANEL SIZE. That's not to say the fit of the panel isn't important. I cut it to final size so it would fit between the grooves in the frame with a 1/8" gap on each edge, as in Fig. 7a below. This way, the panel will have plenty of room to expand.

TABLE SAW OR ROUTER TABLE. You can create the raised field on either the table saw or the router table. With the table saw method, you probably have everything you need already, but you're limited to a flat bevel. To rout them, you'll need a raised-panel bit. (See next page.)

When using the table saw, I like the raised field to be flush (or nearly flush) with the front of the frame (Fig. 7a). This keeps the bevels as flat as possible so there will be less of a chance the panel will wedge itself into the groove as it expands.

RABBET. With a 1/2"-thick panel, keeping the faces flush is no trouble. But with a 3/4"-thick panel, like the ones on the storage tables on page 30, I rabbet the back of the panels first, as in Fig. 4. Simply size the rabbet to match the shoulder of the grooves in the frames (Fig. 4a).

SHOULDER CUTS. After the rabbets have been cut, you're ready to bevel the front face. But as you can see in Fig. 5, the first thing I like to do is make some scoring passes to establish the shoulders of the raised field. This helps create a nice square shoulder and makes it a little easier to set your blade for the bevel cut.

BEVEL CUTS. The panel is beveled by running it on edge across the blade with the blade tilted slightly *away* from the rip fence. So to support the piece, you'll need a tall auxiliary fence or a sled. (Here, I used a shop-made sled, see Fig. 6 and page 20.)

When setting up the cut, the blade should be a hair *below* the shoulder of the raised field. And you'll want to sneak up on the position of the rip fence until the panel fits into the grooves in the frame *and* you have the right-sized shoulder on the raised field (typically about 1/8", as in Fig. 6a).

When you're done, you may need to clean up the shoulder a bit with a sharp chisel, and the bevels will also likely have some saw marks that need to be sanded away.

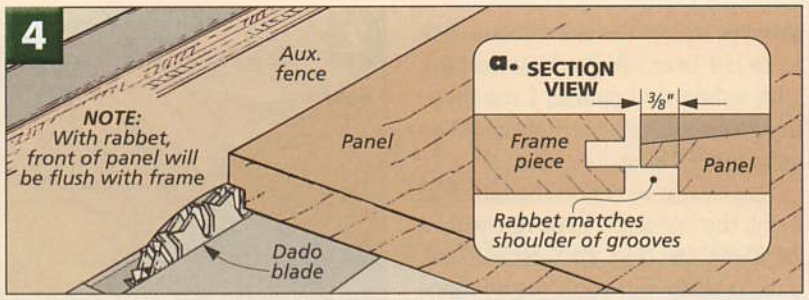

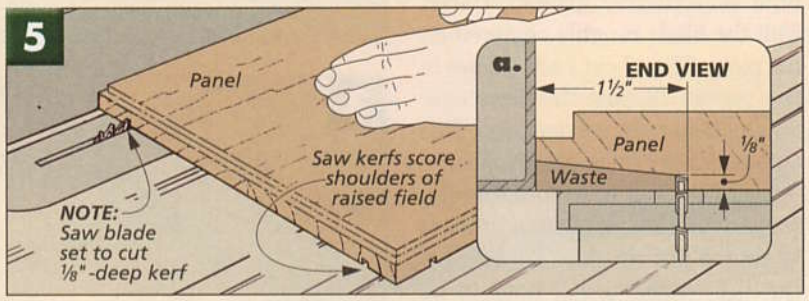

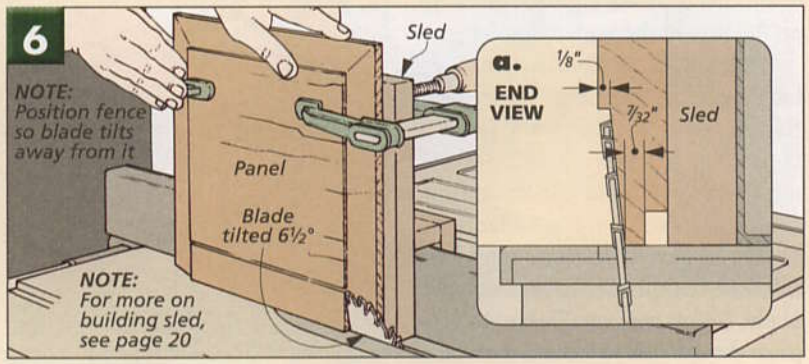

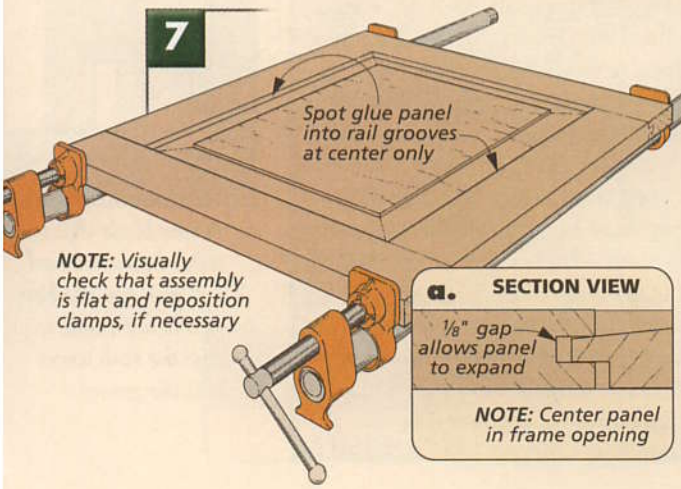

ASSEMBLY

There's nothing particularly difficult about gluing and clamping a frame and raised panel. But there are some important things to note.

First of all, it's always best if you can finish a solid-wood panel *before* the frame is assembled around it. This way, there won't be any unfinished areas that could be exposed when the panel shrinks later.

Also, you don't want to glue the panel in place. It has to be able to expand and contract along its width. (The panel's length won't change much.) But you do want to secure the panel so it stays centered in the opening. Otherwise, it could shift down or side-to-side.

To secure the panel, I usually put a *drop* of glue in the grooves at the center of each rail, as noted in Fig. 7. This allows the panel to expand and contract out from the center. Just double-check that the raised field is centered before the glue dries. W

ROUTING RAISED PANELS

A table saw will cut a raised panel with flat bevels, but you can also rout panels with an elegant *curved* profile. All you need is a bit, a router table, and a tall fence, as shown in the drawing.

VERTICAL BITS. Not long ago, routing raised panels meant you had to mount a large horizontal bit in a router table, see the box below. And that can be downright scary. But now, you can get the job done much more safely with a vertical raised-panel bit.

In order to use a vertical raised-panel bit, you'll need to add a tall fence to your router table. That's because the panels are routed on edge, instead of lying face down as they do with a horizontal bit. (For more on making the tall router fence that's shown here, refer to page 21.)

If you take a look at the margin photos at right, it's pretty easy to see that this process is similar to the table saw technique with one difference — you don't need to rabbet the back edge of the panel. That's because the router bit profile automatically creates a tongue around the edges of the panel, as in detail 'a' at left. (Even the flat-bevel raised-panel bits I've seen create this tongue.) This means you don't have to worry about the panel wedging itself into the grooves. All you need to do is make sure it will fit into the grooves in the frame pieces.

Other than this difference, the procedure is pretty much the same. I started by scoring the shoulders of the raised field on the table saw. (This precaution helps prevent chipout near the top of the router bit.) Then I simply sneak up on the final profile, taking light passes, until the tongue is the right size.

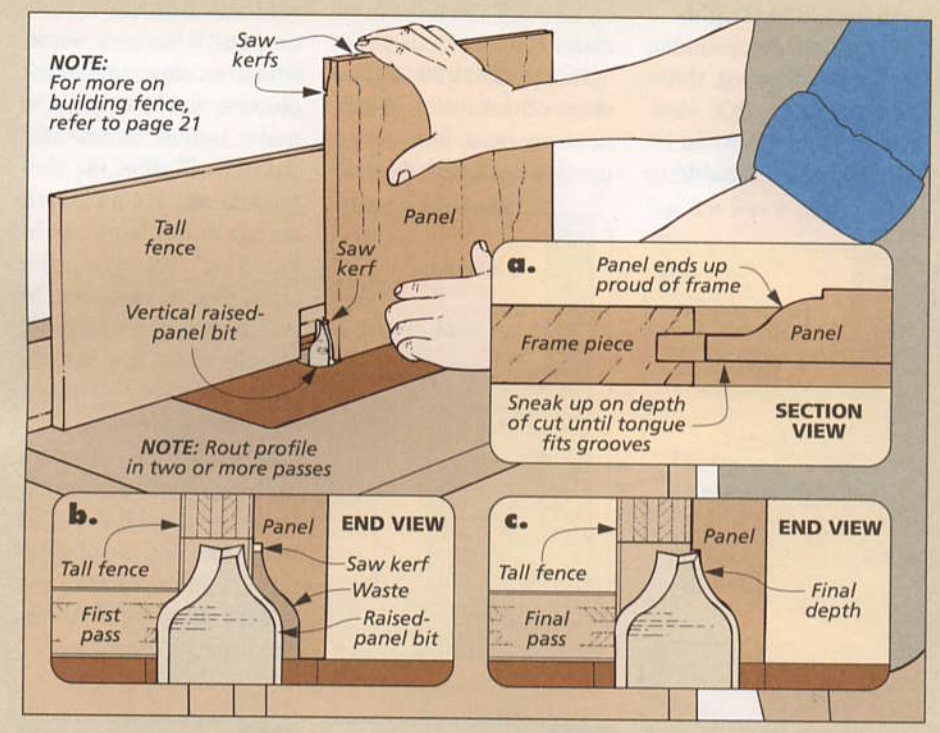

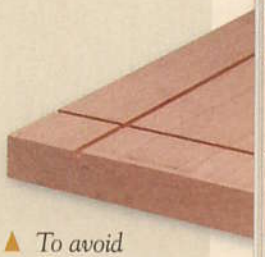

▲ *To avoid chipout when routing with vertical raised panel bits, I like to score the shoulders at the table saw, refer to Fig. 5 at left.*

▲ *The raised panel profile is routed in two or more passes with the help of a tall, shop-built fence, see drawing.*

PANEL-RAISING BITS

Vertical-Style Bits

Vertical raised-panel bits don't look much like the raised-panel bits you may be used to seeing. They're a lot smaller, and there's no bearing on top. But both styles of bits cut the same basic profiles. They just work differently.

With a vertical raised-panel bit, the panel stands on edge, which means you'll need a tall fence, as in the drawing above.

Still, a vertical raised-panel bit is almost always my first choice. You don't need a large router or need to slow down the router, so these bits are a lot safer to use. (All you need is a router with a ½" collet.)

If there's a drawback, it's that the top of the bit tends to create chipout. So I like to score the shoulders, just like I did with the table saw method, see the right margin.

Horizontal-Style Bits

A horizontal-style bit is probably what you first think of when you picture a raised-panel bit. And if you've ever seen one spinning in a router table, you know that they can be a bit unnerving. In fact, to use one, you need at least a 2 HP router, and the speed of the bit has to be slowed down to 12,000 RPM (either by using a variable-speed router or a speed control). Plus, with the larger bits, you may need to increase the size of the bit opening in your router table insert.

For all of these reasons, there's only one time I'll use a horizontal bit. That's when I need to rout an arched or cathedral-shaped panel. Here, the bearing of the bit is needed to guide the workpiece.

SHOP NOTES

Raised Panel Sled for Table Saw

In the past when I've cut raised panels on the table saw, I simply added a tall auxiliary fence to the rip fence. But even with this added support, the panel was still just riding on its thin edges. So for the raised panels in this issue, I decided to make a sled that would provide the panel a little more support, as shown in the drawing below. This h-shaped sled straddles the rip fence, so when the panel is clamped to the sled, they can both be pushed across the blade, as in the photo at right.

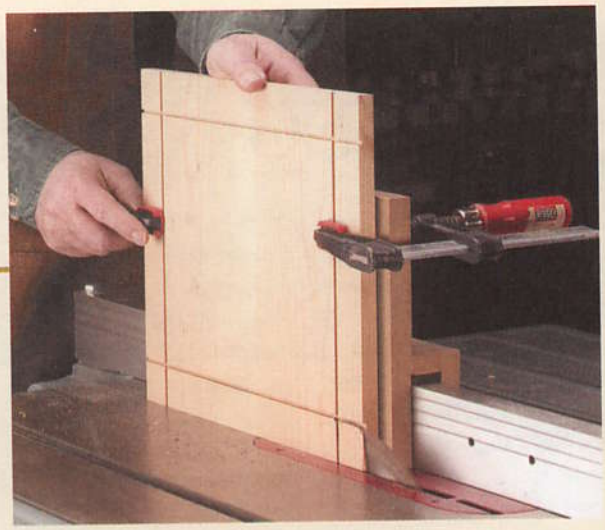

FACE PIECE. As you can see in the drawing, there isn't much to this sled. The face piece should be sized so you'll be able to clamp the panel to it easily.

BACK & CROSS PIECE. The sizes of the other pieces need to be a little more precise and will depend on your table saw. First, when cutting the back piece to size, you need to make sure its height (width) will allow the sled to clear any bolts that are on top of the fence, as in detail 'a.' Likewise, the cross piece is also sized to match your saw's fence. It should allow the sled to slide smoothly without any side-to-side play.

USING THE JIG. There's nothing to using this jig. Once the panel is clamped to the face and the blade is tilted, you're ready to get started. For more on this, see page 16. W

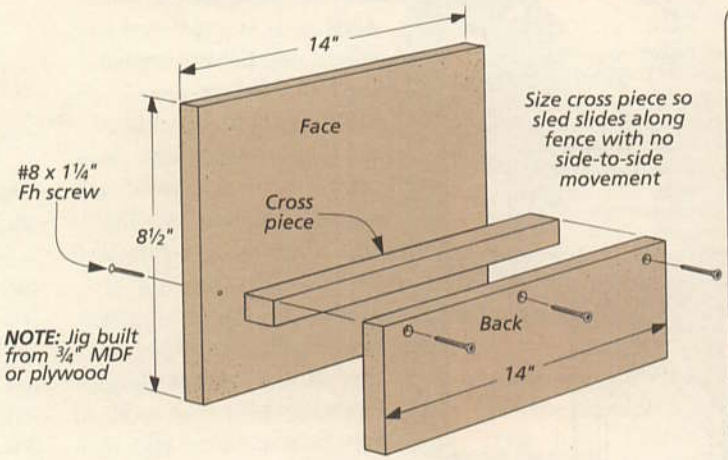

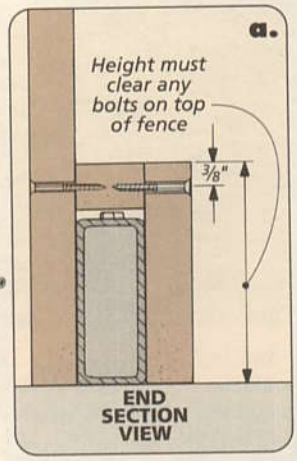

Taper Jig

The base of the adjustable lamp on page 22 has tapers on every side, as shown in the margin photo. Since this meant making eight taper cuts, I decided to build a jig for the table saw.

This jig is just a pair of cleats glued to a ¼" hardboard base. (You could use plywood here.)

After laying out a taper on one of the base pieces, I started by tracing an outline of the workpiece onto the base of the jig with the taper line flush to the edge, see Fig. 1.

Next I glued a pair of ¾"-thick cleats onto the base, using the layout lines as reference guides, as you can see in Fig. 2.

USING THE JIG. Now that the jig is built, it's time to cut some tapers. When cutting these tapers, you'll want to leave the line. This gives you a little extra material for sanding off any marks left by the saw.

I began by setting the rip fence a little wider than the jig and made the first cut. Then I adjusted the fence as needed to sneak up on the line, see Fig. 3. Next I flipped and rotated each workpiece until all the tapers were cut. Then all that's left is to sand away the saw marks. W

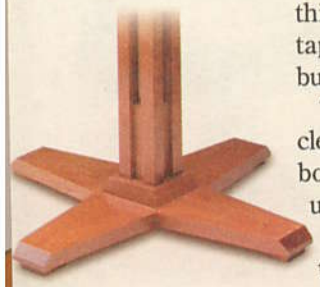

▲ *The base of the lamp on page 22 has eight tapered sides, but one quick jig ensures they're all even.*

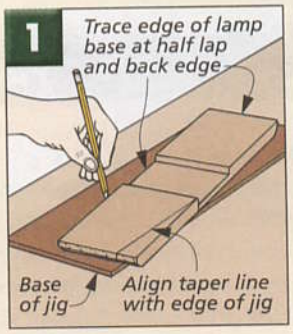

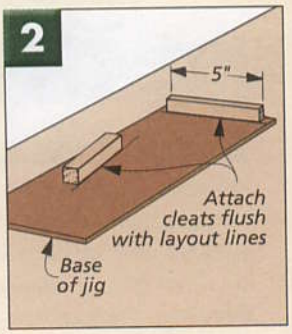

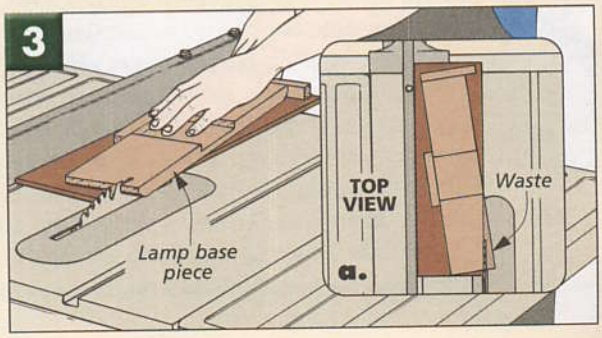

Raised Panel Bit Jig

Routing a raised panel with a vertical raised panel bit requires a different solution than the table saw technique that's shown at left. This time, instead of a moving sled, I built a tall, stationary fence that gets clamped down to the router table, as you can see in the photo at right.

BASE. The first piece to cut to size is the base, as shown in the drawing below. It should be about the same length as the top of your router table (so you can clamp it down easily) and wide enough for some triangle-shaped supports. The only other thing to do to this base piece is to cut a circular opening for the bit, as shown in detail 'b' below. Just be sure to size it to fit your vertical raised panel bit. (I used a sabre saw, but a band saw or coping saw would also work.)

FENCE. Next, I cut the fence to size. Like the base, its exact dimensions aren't critical. But you do want to make sure you have plenty of support on either side of the router bit. And of course it should be tall enough to support the panel.

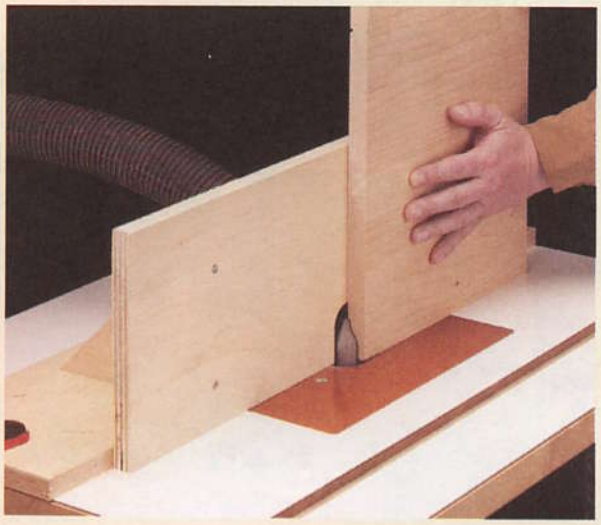

Like the base, the only other thing to do to the fence is cut an opening for the bit, as in detail 'a.'

SUPPORTS. Before attaching the fence to the base, you need a pair of triangle-shaped supports. The important thing here is that they hold the fence square to the router table.

After the fence has been glued and screwed together, the tall fence is ready to be clamped to your router table, and you're ready to rout the raised panels.

However, if you have a lot of panels to rout, you might want to consider adding a dust collection hood to the back of the bit opening, as you can see in the margin photo at right. (These bits do create their share of sawdust.) I glued this hood together quickly using scraps of 1/4" hardboard. Just size the hole to hold the hose on your vacuum or dust collector.

▲ *Raised panel bits can create a small dust storm, so you may want to add a shop-made dust collection hood to the back side of the fence.*

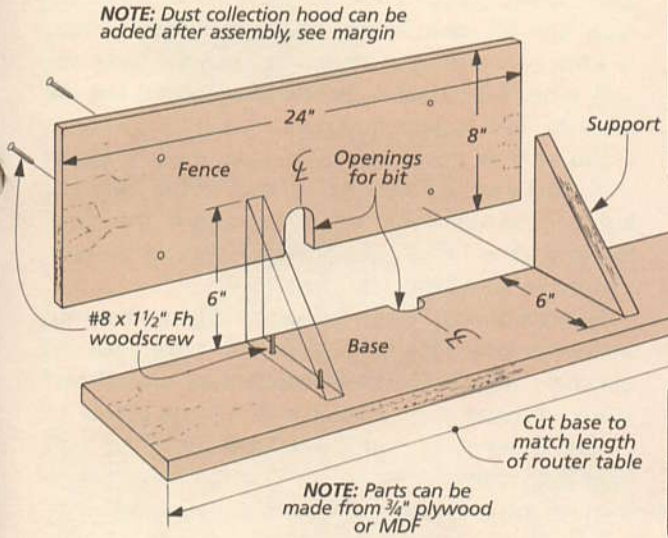

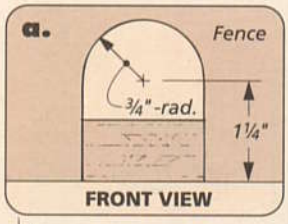

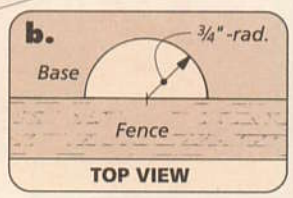

Cross-Cutting Long Panels

The top and bottom panels on the bookcase were too large to cut to length with a crosscut sled on the table saw, and a circular saw blade makes a pretty rough cut. So I came up with a different technique for crosscutting a long, wide piece on the table saw.

RUNNERS. The first thing I did was add two temporary runners to the *bottom* of the panel. The first runner is sized to ride in the miter gauge slot on my saw and is screwed in place, see Fig. 1a. The second is clamped to the panel flush with the saw's edge. This pair of runners stabilizes the panel as it's pushed across the blade.

OUTRIGGER. But I still needed help supporting the end of each panel as it was being cut. So I clamped a scrap piece to a sawhorse, making sure the top of this "outrigger" was flush with the top of the saw's table.

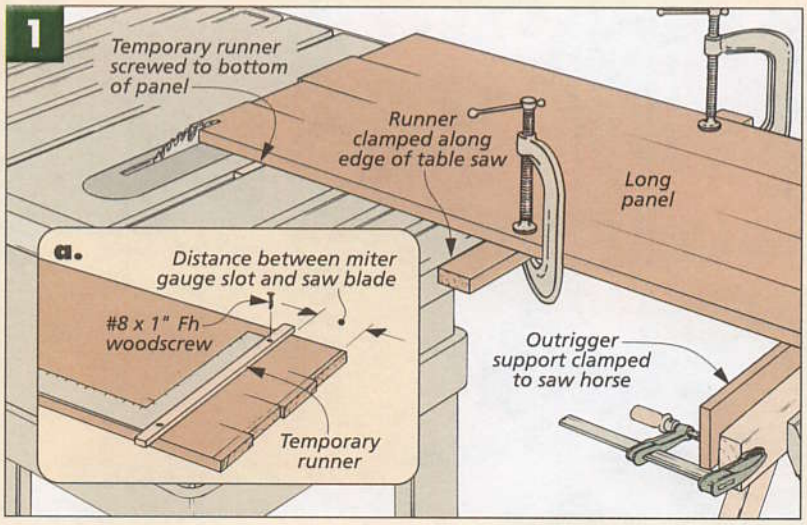

ADJUSTABLE FLOOR LAMP

The secret to making this lamp adjustable is simple — it's just basic joinery and common hardware.

What makes this floor lamp unique is that it can be adjusted up or down depending on where it's needed. So you can set it at just the right height for reading or raise it up and put it in the living room as a corner accent.

But if the idea of building a project with moving parts sounds difficult — don't worry, it's not. This lamp is made in two sections. I built the upper section, or sliding shaft, first. It's made from just four pieces that interlock to form a cross-shaped assembly. Then the body was built around the shaft to guide and support it but still allow the shaft to move freely.

Not only is this a unique design, it's also really straightforward to build. The majority of the joinery is just screwed together — with the exception of a rabbet for the shaft and a half-lap for the base. And there's even a separate half-lap article on page 28.

Another design feature is that it's constructed with under five board feet of stock, which helps keep the material costs low. Plus the lamp hardware can be found at any hardware store or home improvement center.

And if you're not comfortable with the wiring, your local lamp shop should be able to help with any questions, or you could even have them do the wiring.

◄ *The shaft of the lamp can "telescope" up or down depending on where it's used.*

Construction Details

OVERALL DIMENSIONS:
18"W x 18"D x 69"H

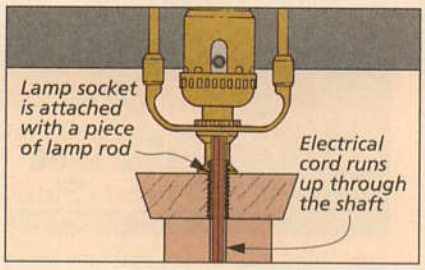

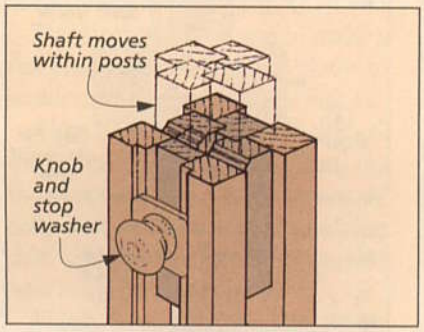

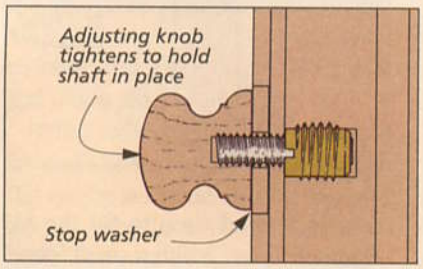

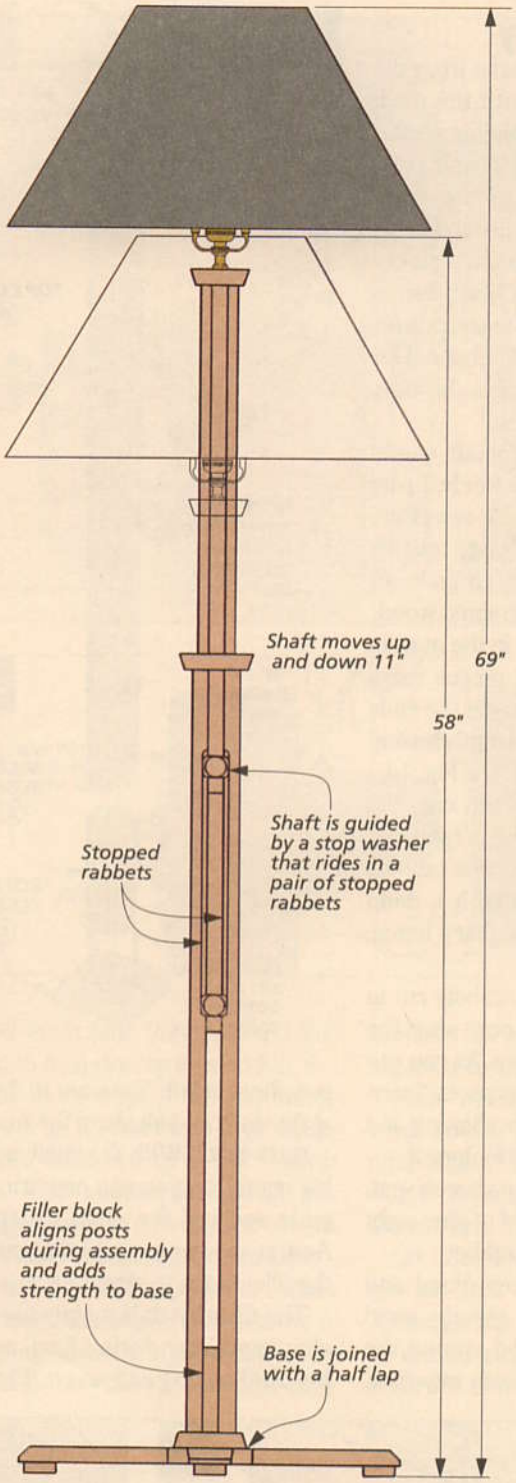

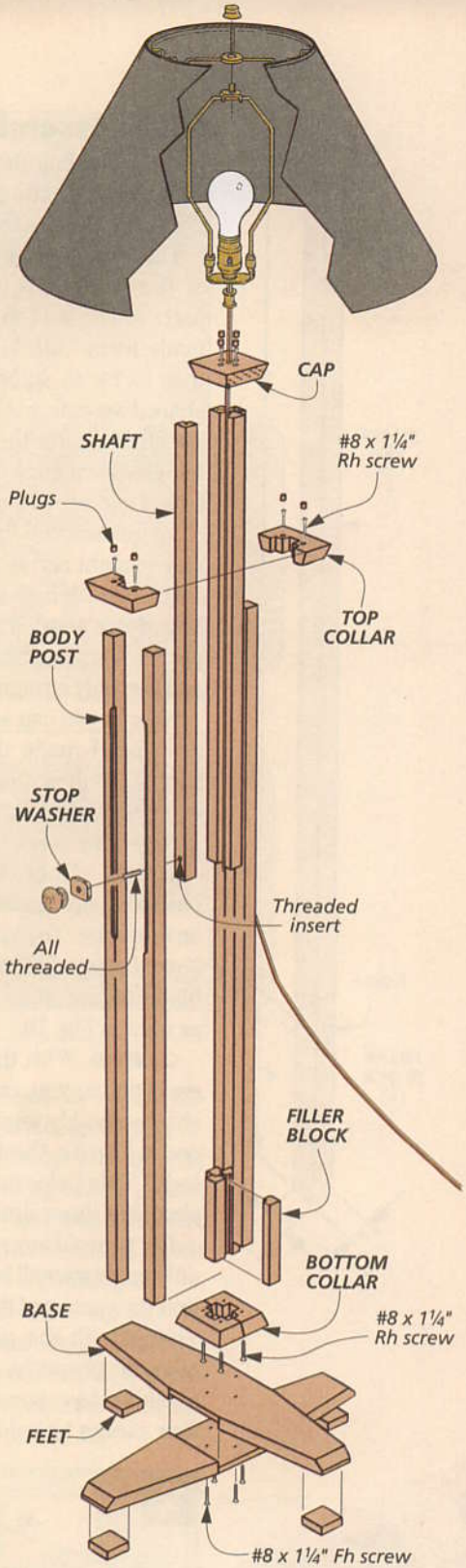

MATERIALS

A	Shaft (4)	¾ x ¾ - 24
B	Filler Block (4)	¾ x ¾ - 4¾
C	Bottom Collar (1)	¾ x 3½ - 3½
D	Top Collar (1)	¾ x 3½ - 3½
E	Cap (1)	¾ x 2¾ - 2¾
F	Body Posts (4)	¾ x ¾ - 36
G	Base (2)	¾ x 4 - 18
H	Feet (4)	½ x 1½ - 1½
I	Stop Washer (1)	⅛ x 1 - 1¼

- (1) ¼"-20 Threaded Insert
- (1) ¼"-20 Threaded Rod (1" long)
- (1) 1"-dia. Wood Knob
- (1) Lamp Socket
- (1) Lamp Spacer
- (1) Lamp Rod (1" long)
- (1) Electrical Cord w/Plug
- (1) Lamp Harp and Shade
- (4) #8 x 1¼" Fh Woodscrews
- (12) #8 x 1¼" Rh Woodscrews
- (12) ⅜"-dia. Wood Plugs

CUTTING DIAGRAM

¾" x 5½" - 72" Cherry (2.8 Bd. Ft.)

¾" x 5½" - 48" Cherry (1.8 Bd. Ft.)

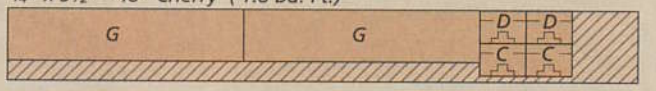

NOTE: *Pieces C & D are oversized, refer to page 25.*

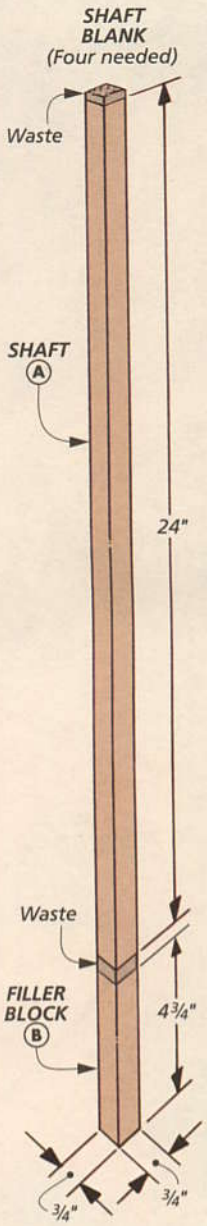

Shaft Assembly

I began building the lamp from the inside out, starting with the most important part — the sliding shaft.

The *shaft (A)* is the center point of the lamp, and all of the other parts will be built to fit around it. It's made from four ¾"-square pieces that form an interlocking, cross-shaped assembly. At the same time, the shaft creates the ¼" channel for the electrical cord to pass through, as you can see in Fig. 1c.

To make sure the shaft would stay straight and move freely, I paid extra attention to stock selection. You don't want the long, narrow pieces warping. So try to pick out and use only straight-grained wood.

Now as you can see in the margin drawing, I made the pieces extra long. This allows me to cut the ends square, plus the extra length is used for the *filler block (B)*, see Fig. 1d.

RABBETS. Once you've cut the pieces square, each one is rabbeted on one edge. To make these rabbets I used the table saw with a dado blade buried in an auxiliary fence, as seen in Fig. 1b.

CLAMPING. With the rabbets cut in each piece, you can now glue the shaft assembly together. As you can see in Fig. 1c, the four parts "interlock." This helps make aligning and clamping them almost foolproof.

But to avoid any glue squeeze-out, only apply a small bead of glue right into the corner of the rabbet.

Now with the pieces glued and aligned properly, I simply used masking tape wrapped around the four pieces to hold them together, see photo at left. You want to do this at the ends and all along the middle.

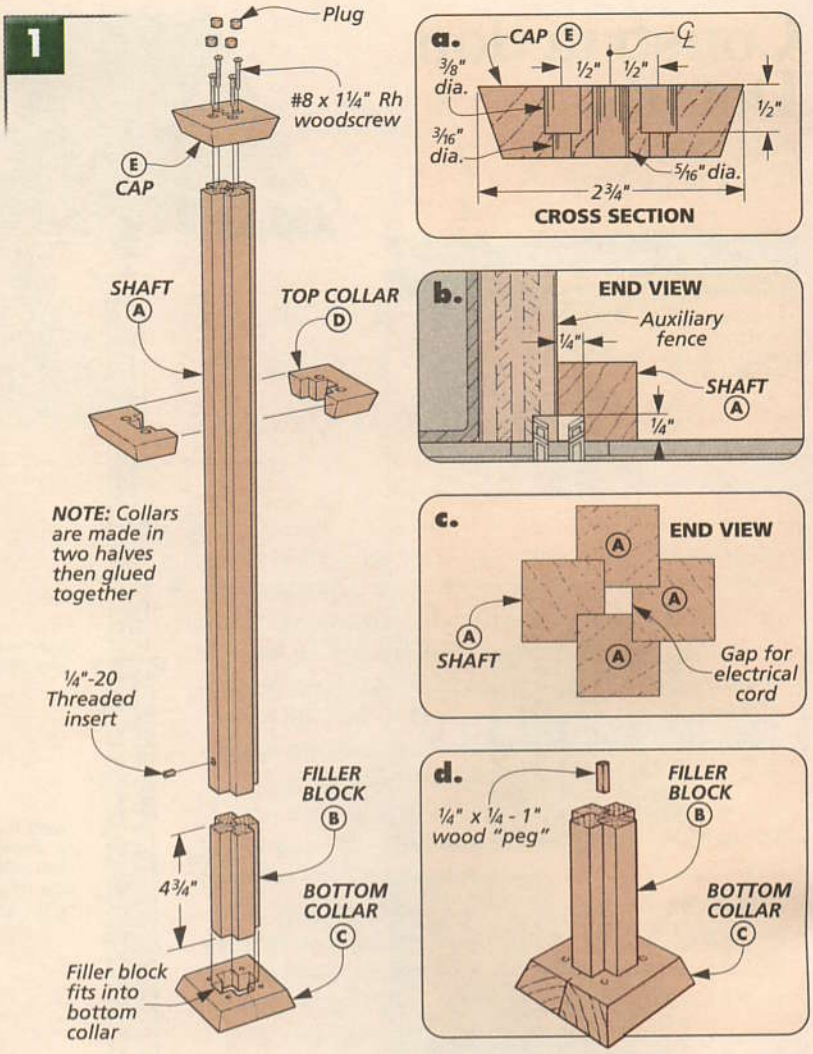

FILLER BLOCK. With the shaft assembly complete, you can now trim the ends and cut the shaft to length. And at the same time you can cut the filler block to size.

The filler block is mainly used for alignment later during final assembly. And as you can see in Fig. 1d, now is a good time to fill the ¼" channel opening with a small "peg."

THREADED INSERT. The next step for the shaft is to install a threaded insert. This insert is just the first part of the adjusting mechanism.

I started by drilling a hole slightly smaller than the insert (Fig. 2). But to keep the shaft steady, try using a spacer block underneath.

▲ *The shaft is easily clamped with masking tape.*

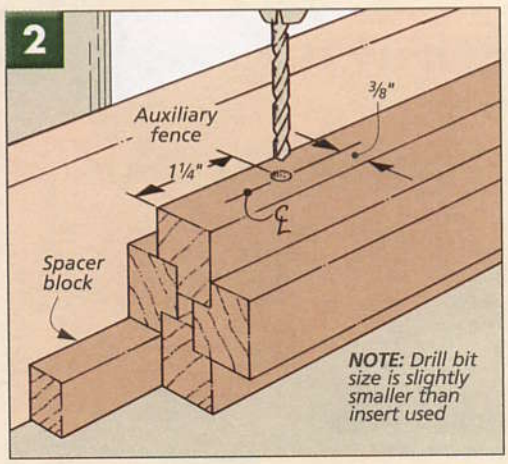

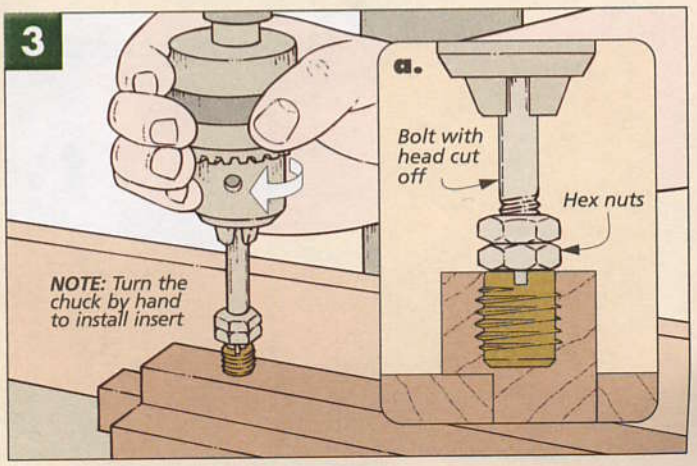

To install the insert, I used a bolt with the head cut off and added a pair of hex nuts, see Fig. 3a. Then it's mounted in the drill press and slowly turned by hand, see Fig. 3.

COLLARS

Now that the shaft is complete, it can be used as a gauge in making the collars. The two-piece collars are made to fit around the shaft and filler block.

MAKING THE NOTCHES. To make the collars, I began with four oversized blanks and laid out the stepped notches. Next the center, taller part of the notch is made (Fig. 4).

The method I used was to make a cut and adjust the dado blade to sneak up on the height, see Fig. 4a.

Now I adjust the stop block until the layout line is reached. Then flip the piece around — this automatically centers the notch. I found that this "cut and test" method worked best to sneak up on the fit.

Finally, I repeated the method for the shorter "steps," as shown in Fig. 4b. What you're looking for is both collars to fit around the shaft and just touch each other.

FITTING THE TOP. Once the collars fit around the shaft, the *bottom collar (C)* can be set aside. But the *top collar (D)* has to allow the shaft to move freely up and down.

This is done by placing the top collar pieces around the shaft and tracing a new line, see Fig. 5. Then I went back and trimmed that line all the way around, as seen in Fig. 5a. This allowed just enough extra room for the shaft to slide easily.

Now with the collars notched, I glued each pair together and cut them to final size, as seen in Fig. 6.

The next step is the mounting holes (Fig. 6). Start with a 3/8" counterbore followed by a 3/16" shank hole. The counterbores will get plugged, and the oversized shank holes allow a little fine-tuning later.

BEVELS. The last step for the collars is to bevel the edges. But to prevent trapping the workpieces between the blade and the rip fence, be sure to make the cuts with the blade tilting away from the fence, see Fig. 7.

Now when cutting the bevels, what you're looking for is a nice crisp edge (Fig. 7a). I found the best way to do this was to sneak up on the cut until there's no flat spot.

CAP. The bevels in the *cap (E)* are cut at this time too (Fig. 1). Although the cap is smaller, it can be drilled and beveled just like the collars as shown in Fig. 1a.

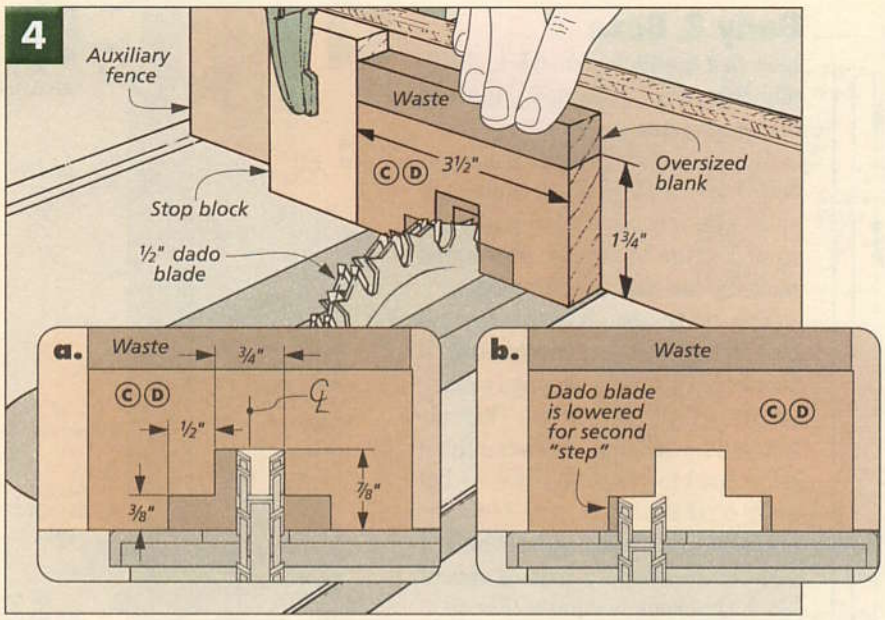

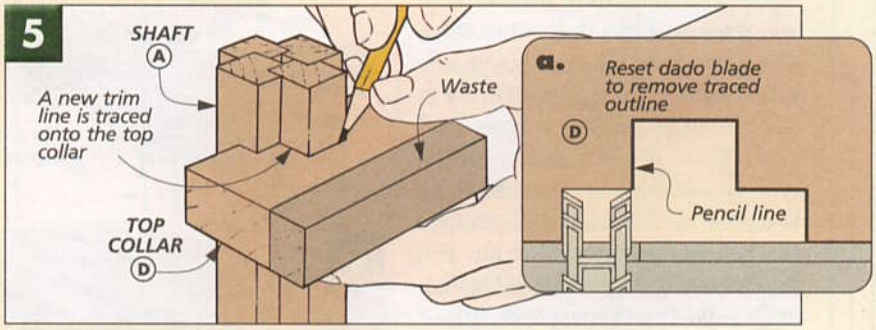

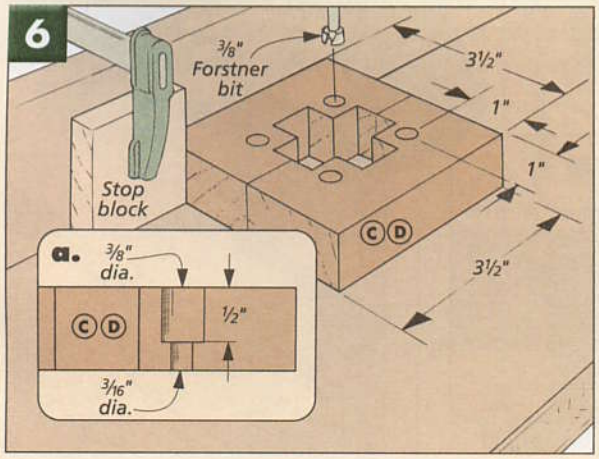

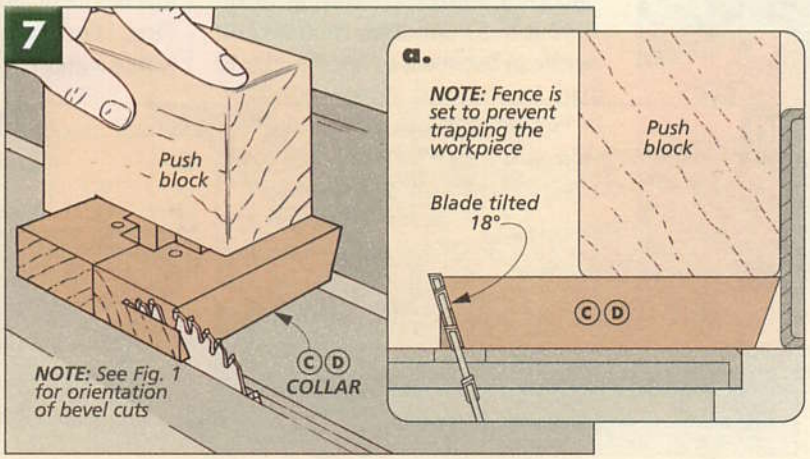

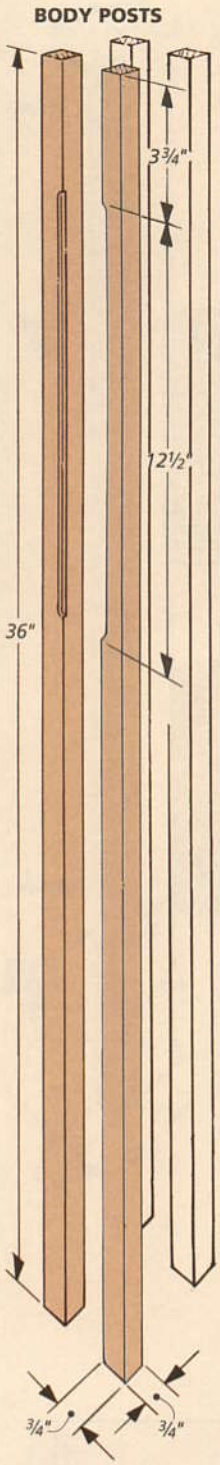

Body & Base

Now that the sliding shaft is built, it's time to turn your attention to the next major component — the body.

The lamp body is made from four *body posts (F)* that surround the shaft like a cage. These posts are similar to the ¾"-square pieces that make up the shaft — only longer.

The body also has the second part to the adjusting mechanism. It consists of a shallow stopped rabbet, see margin drawing at left. This rabbet guides a stop washer which helps hold the shaft in place — but more on that later.

RABBET. To make the rabbets, I decided to clamp a pair of spacer blocks between two posts (Fig. 9).

These spacers were used for several reasons. First, they act as stops and help make an even set of rabbets. Second, these allow the bit to cut only one edge at a time. And finally they prevent tearout near the ends of the rabbets. Note: In order to cut the ¼" rabbet, I had to change the bearing on my rabbet bit. You might have to do the same (Fig. 9a).

To make the ⅛"-deep cuts, I used the same motion as if I were using the router fence — from right to left (Fig. 9). After the first rabbet is cut, I simply rotated the workpiece and repeated the process.

BASE. The *base (G)* is the last major part to be constructed. The two pieces are joined by a half-lap. This joint is very strong yet surprisingly simple to make.

To make this joint, I used the table saw with a dado blade along with an auxiliary fence on the miter gauge. I started by cutting to the layout lines and then removed the waste in between, as seen in Fig. 10.

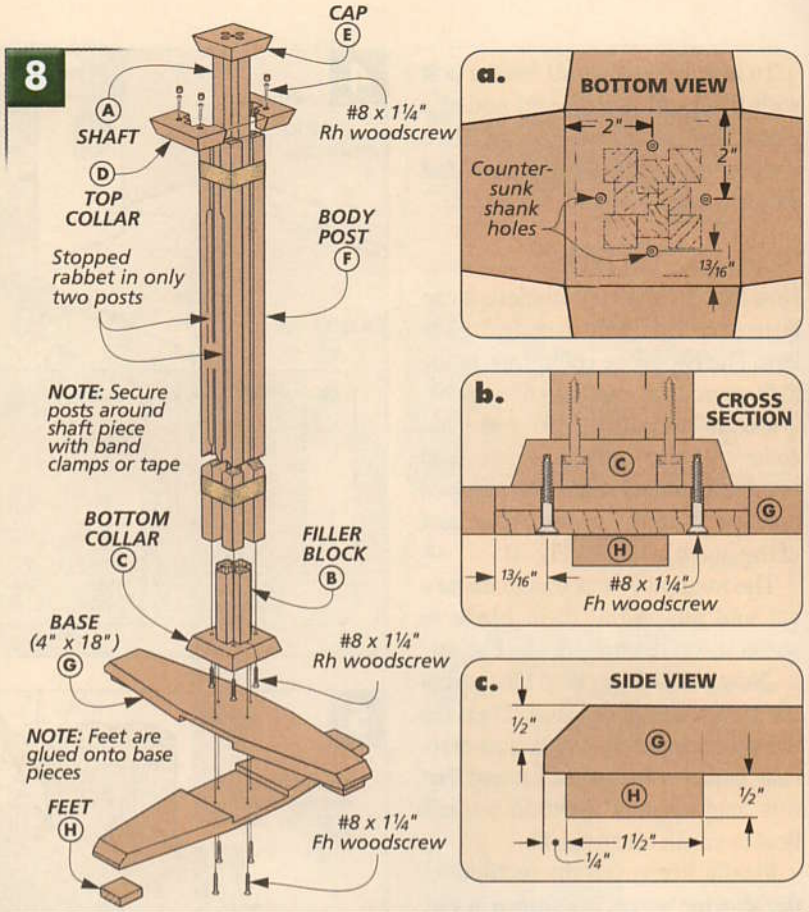

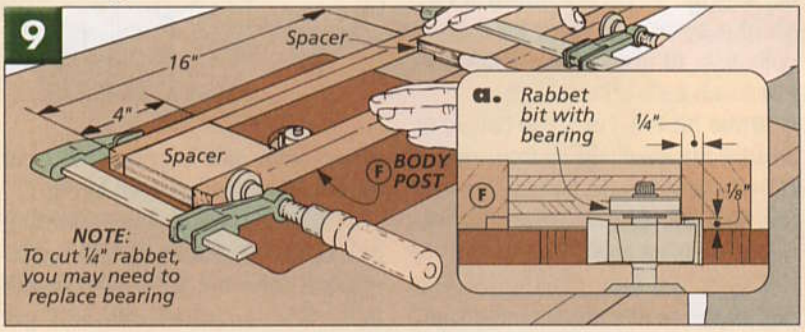

For more tips on making this and other half-lap joinery, turn to the technique article on page 28.

The next step in making the base is to bevel the ends (Fig. 8c). I did this before tapering for two reasons. First, I find it safer and easier to rout with a wider edge. And second, any tear-out will be removed by the tapering operation, as in Fig. 11.

Now to make the tapers I once again turned to the table saw. But to cut an even taper on all the edges, I made a jig like the one shown in Fig. 11. To see how to build and use it, turn to Shop Notes on page 20.

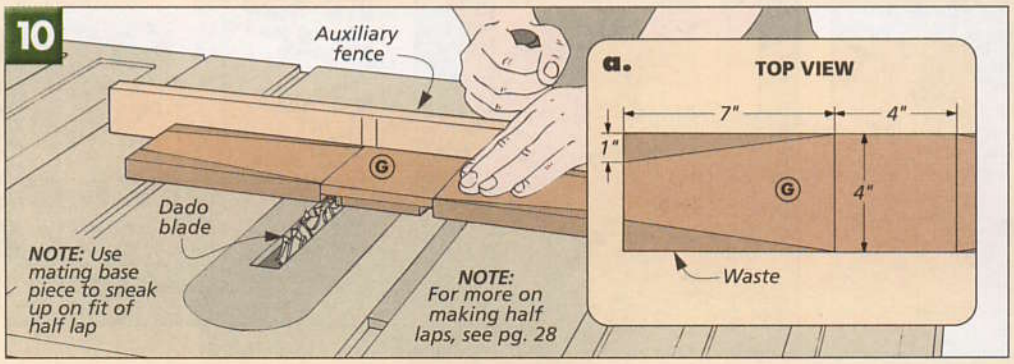

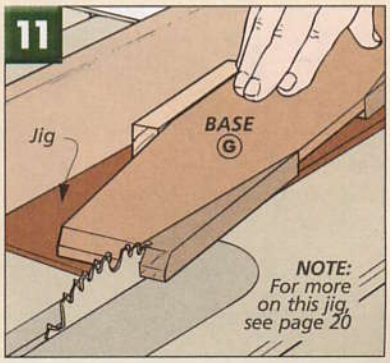

FEET. Finally after the base is completed and glued together, you can attach the *feet (H)*. These are just square pieces of ½"-thick stock glued onto the base (Fig. 8c).

ASSEMBLY

With all of the parts completed, it's time to put it all together — starting with the four posts.

I began by positioning the posts around the filler block and temporarily placed the shaft between the posts as a spacer, as shown in Fig. 8. Then it's all held together with some band clamps. Note: Be sure the two posts with the rabbets are positioned correctly.

Now the posts can be secured to the bottom collar with some screws. Note: Make sure to pre-drill the posts to prevent splitting.

When it's time to attach the base to the body, offset the screws to avoid hitting the heads of the others, as shown in Figs. 8a and 8b.

TOP COLLAR. Attaching the top collar is one of the last steps. The goal here is to align the top collar and body posts so the shaft moves freely up and down without binding.

To align the top collar to the posts, I used the inside corner of the collar as a guide, as in Fig. 12b.

The first step is to align the post flush with the corner. Then I tested the fit by sliding the shaft up and down and looking for any tight spots. If it's snug, I could reposition the posts slightly because of the oversized shank holes (Fig. 12a).

To adjust the fit, just loosen the screws and pull the posts back a hair. After the posts are aligned properly, the holes can be plugged.

CONTROLS. To complete the adjusting mechanism, a wood knob and a rectangular washer are needed. The knob is drilled for a short length of threaded rod that's glued in place with epoxy, see Fig. 12d.

This knob threads into the insert that you installed in the shaft earlier. And the ⅛"-thick *stop washer (I)* is sized to fit the rabbets. It acts as a guide as it rides in the rabbets in the body posts. Along with the knob, it helps hold the shaft in place.

WIRING IT UP. The final step is to wire the socket. But don't worry, it's not fancy or complicated. The hardware consists of a short piece of lamp rod, spacer, lamp socket, harp for the shade, and several feet of electrical cord with a plug (Fig. 13).

I started with threading and gluing the lamp rod to the cap. The harp and socket can go on next, see Fig. 13a. Then I snaked the cord up through the shaft and wired it to the socket. Finally the socket can be snapped into place.

The very last step is to top off the lamp with a shade of your choice. W

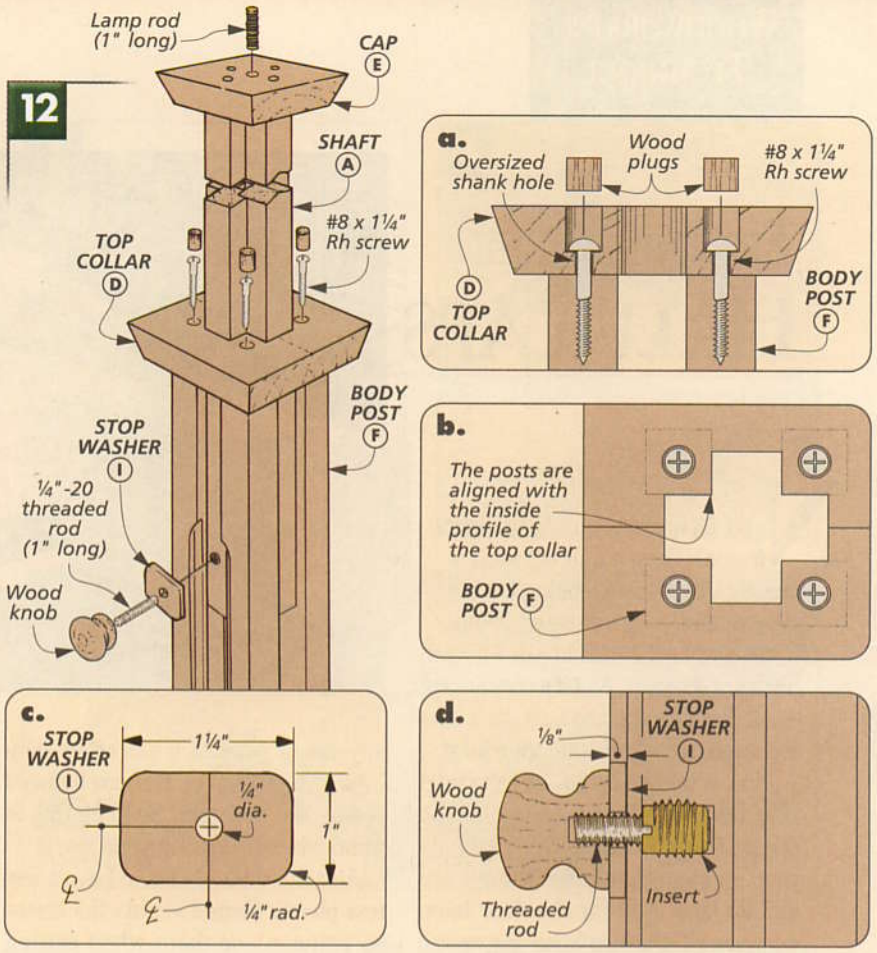

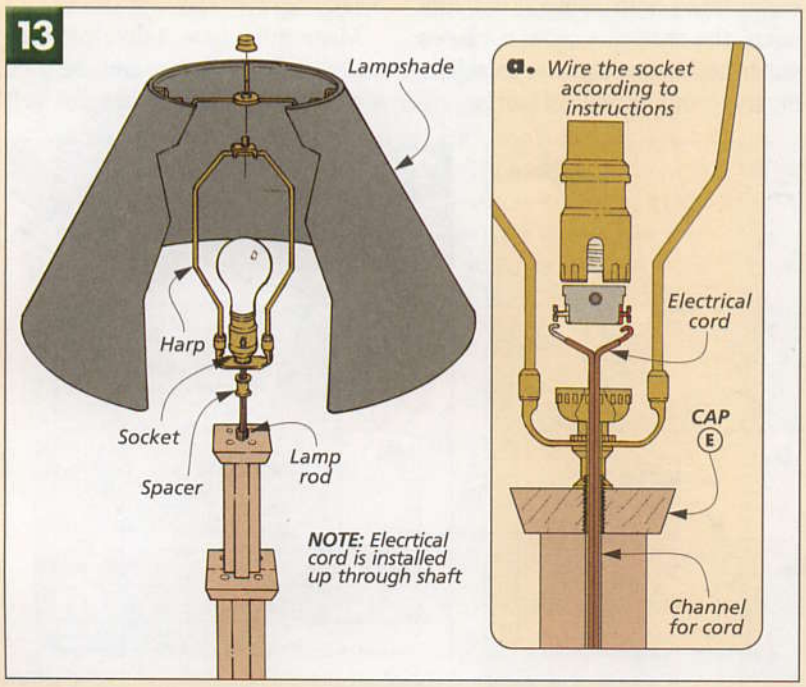

▲ *Tightening the shaft only takes a quick twist of a knob.*

TROUBLE-FREE HALF LAPS

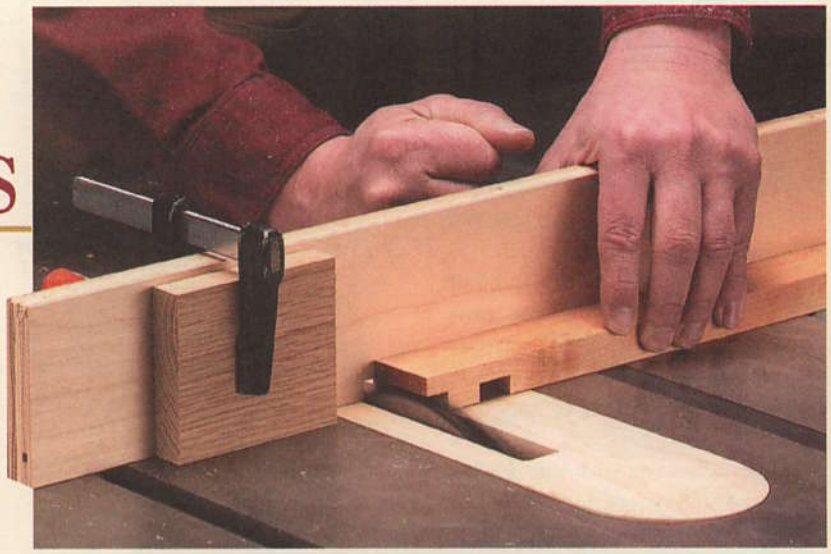

▲ *Two face grain surfaces make these half laps strong enough for any project. Plus, you can have your saw set up and ready in no time.*

Need to build a quick, strong frame? Then a half lap joint is exactly what you're looking for. It's very quick — all you need is *one* basic setup on the table saw for both halves of the joint. And it's very strong — all that face grain to face grain contact is perfect for a solid glue joint.

Plus, a half lap is pretty versatile. Just take a look at a couple of the projects in this issue. On the bookcase on page 6, the face frames are all half laps. And for the floor lamp on page 22, the two base pieces are joined with a cross lap.

STOCK THICKNESS. There's nothing fancy or tricky about a half lap. Half the stock's thickness is removed from the pieces so they overlap and their faces end up flush. But for this to work, the mating pieces have to be the *exact* same thickness.

No big deal, right? Well, I've gotten "tripped up" before by forgetting that my thickness planer often "snipes" the pieces, making them slightly thinner on the ends. It usually takes several frustrating minutes trying to set up the saw before I realize the problem. So keep this in mind when preparing your stock.

Also, it's a good idea to have a few test pieces planed to this thickness so you can use them when setting up the table saw, as in Fig. 1.

BLADE SETUP. With the stock thicknessed and the pieces cut to length, it's time to set up the table saw. Here you need a dado set. I like to set mine as wide as possible so there are fewer passes to make. Also, you'll want to attach an auxiliary fence to the miter gauge, as you can see in the photo above. This supports the workpieces *and* allows you to add a stop block for establishing the shoulder of each half lap.

For now, though, the focus is going to be getting the dado blade set at the right height. This means raising it exactly half the thickness of the stock. I start by simply drawing a layout line centered on the thickness of one of the pieces. Then I raise the blade so the teeth are flush with this line.

Of course, this is only a start. The real test is cutting half laps on the ends of your test pieces, as in Figs. 1 and 1a. There's no need to fuss with the width of these half laps yet. Just concentrate on getting the height of the blade right so the faces end up flush, as in Fig. 1b.

Most of the time, I find the faces are off only a fraction, and the trick is to adjust the blade exactly *half*

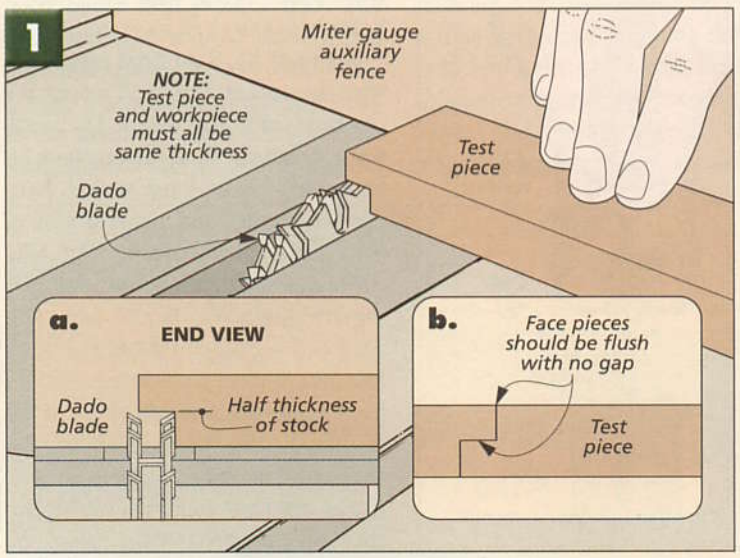

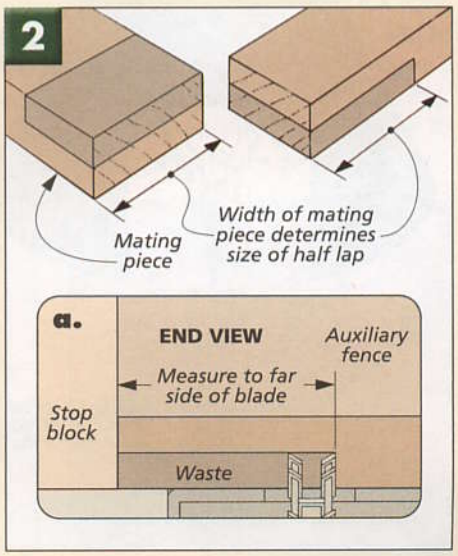

the difference. Just be patient here. You may need to adjust the blade height a few times before the faces end up perfectly flush.

FENCE SETUP. Once the blade is set, all that's left is to establish the width of the half lap by clamping a stop to the auxiliary fence. The position of this stop will be determined by the width of the *mating* piece, as in Fig. 2. Just remember to measure to the outside edge of the blade (Fig. 2a).

If the two workpieces are the same width, then one setup is all you'll need to make. If they're different widths, you'll need to reposition the stop for each piece. Either way, it can be done pretty quickly.

MULTIPLE PASSES. Now you're ready to cut the half laps on the workpieces. This will require making multiple passes, and I usually start with the piece pushed all the way against the stop, as shown in Fig. 3.

CLEANING THE CHEEKS. With the half laps cut, I like to inspect the cheeks to make sure they're as smooth as possible. (It makes for a stronger glue joint.) If they're not, you can try sliding the workpiece back and forth across the blade, while you slowly push it forward, as in Fig. 4.

ASSEMBLY. When all the half laps are ready, you can assemble the frame, as shown in Fig. 5. This is a two-step process. First, you want to draw the shoulders of the frame together with pipe clamps (or band clamps). Then you can add a small clamp to each corner.

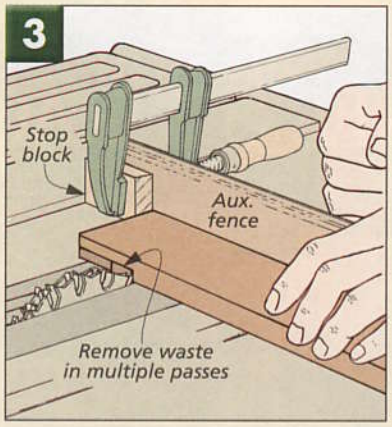

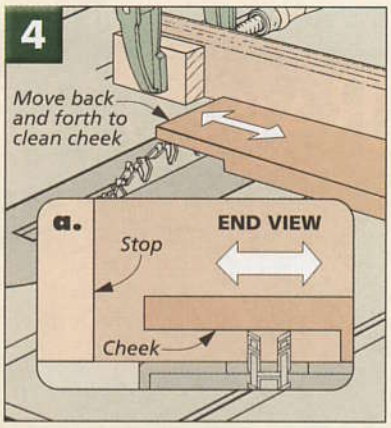

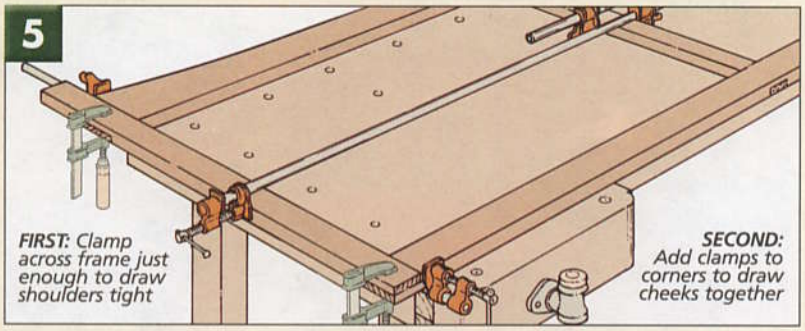

HALF LAP TIPS FOR LONG WORKPIECES

You can't beat a half lap when you need a strong, simple joint. But when the pieces get long (like the face frame rails on the sofa table bookcase), there are some unique challenges.

GETTING A GRIP. When cutting the half laps on the ends of the rails, the first thing I had to figure out was how to hold these long workpieces. Clamping them to the auxiliary miter guage fence would have meant re-clamping them with each pass. Instead I created a simple hold down by screwing a cleat to the front of the auxiliary fence, as you can see in Fig. 1 below. This hold down keeps the workpiece from tipping up but still lets me shift the piece without too much trouble.

CUTTING TO A LINE. When cutting half laps in the center of the long rails, working with a stop just wasn't practical (without making the auxiliary fence over six feet long). Instead I worked to a line, as in Fig. 2. And to make it easy to see what I was doing, I laid out the half lap on both faces and drew lines on the auxiliary fence to show where the dado blade was cutting. Then all you need to do is carefully sneak up on the final width of the half lap, testing the fit with the mating workpiece.

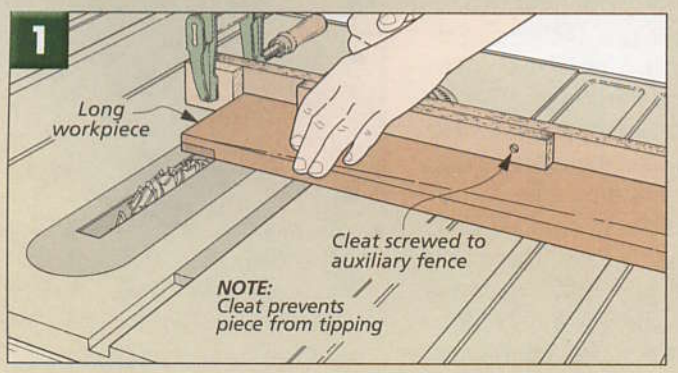

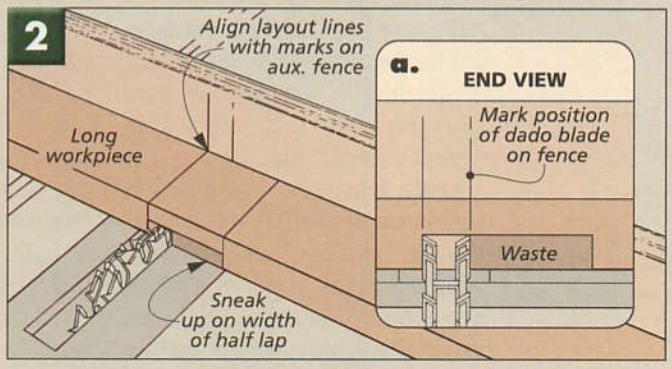

RAISED PANEL STORAGE TABLES

Is it furniture that provides storage, or storage that serves as furniture? Either way, you'll get double-duty from this elegant and practical project.

When it comes to storage, what could be more practical than a box with a lid? The trouble is that "practical" doesn't necessarily mean "attractive." A plain old box may be fine for the garage or basement, but it's not the kind of thing you'd want to display in the living room. This project changes that.

RAISED PANELS. By using raised panels on all four sides, a plain box can be turned into a storage table with style. In fact, you might not even guess there's storage inside this table unless someone showed you that the lid simply lifts off to reveal the large space inside (see the photo at right).

PANEL OPTIONS. The panels in the tables shown above were "raised" on the table saw. It's easy to do this by just making a bevel cut on each edge of the panel.

If you'd rather dress up the panel with something fancier than the flat surface of a bevel, you might want to try a raised-panel bit in the router table. There are a variety of bits that can cut a curved profile on the shoulder. And there's more information about this option on page 19.

▲ *To access the storage space inside the table, just lift off the lid. When you replace the lid, cleats on the bottom face automatically center the lid on the table and prevent it from shifting out of position.*

Construction Details

OVERALL DIMENSIONS:
21½"W x 21½"D x 20"H

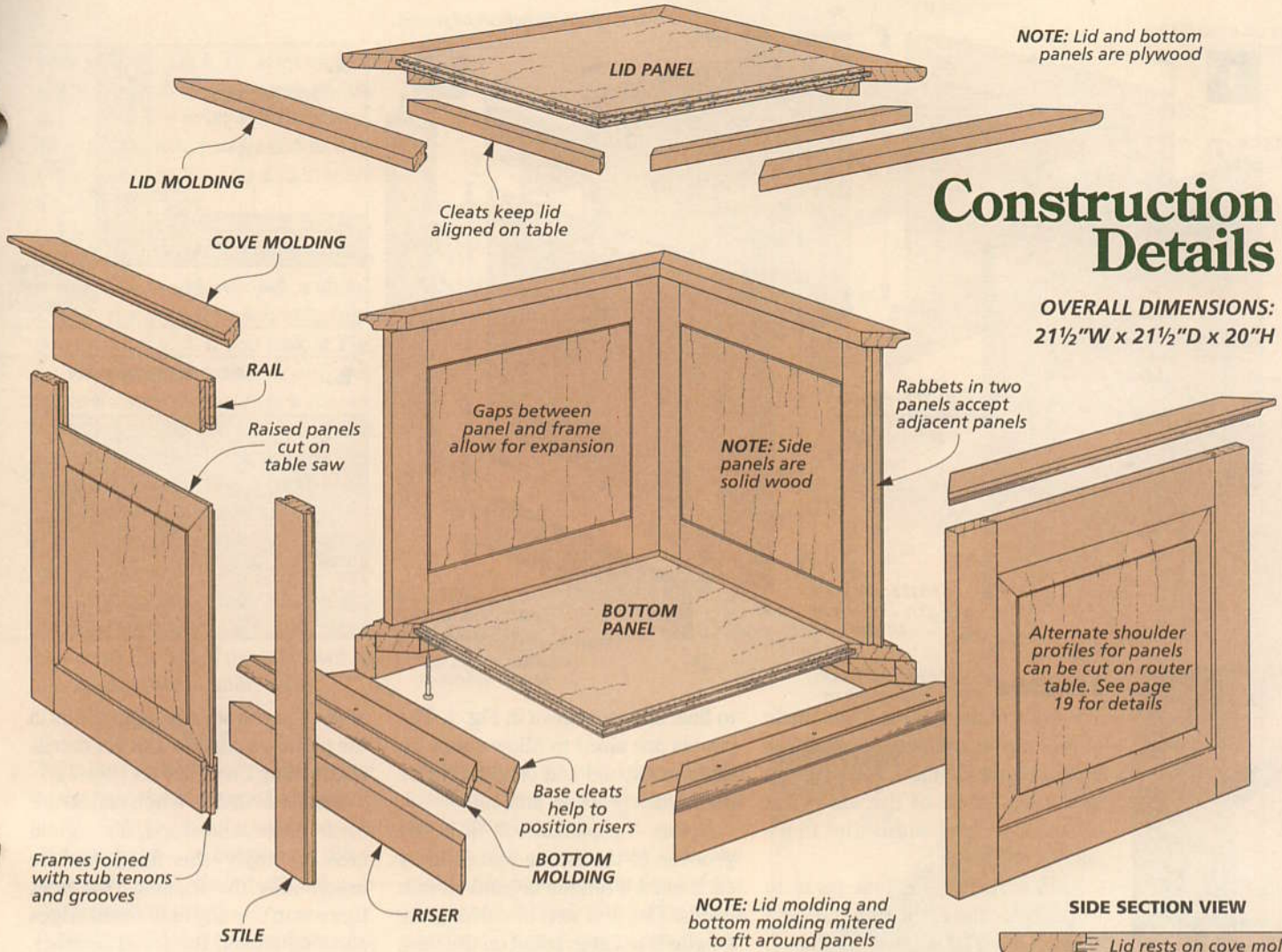

SIDE SECTION VIEW

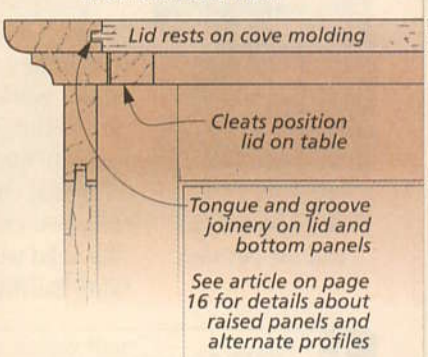

MATERIALS, SUPPLIES & CUTTING DIAGRAM

A Stiles (8)	¾ x 2½ - 15½	**H** Cove Molding (4)	¾ x 1¾ - 20¼
B Rails (8)	¾ x 2¼ - 14¼	**I** Lid Panel (1)	¾ ply. - 17½ x 17½
C Panels (4)	¾ x 14 - 11½	**J** Lid Molding (4)	¾ x 2¼ - 21½
D Bottom Panel (1)	¾ ply. - 16¼ x 16¼	**K** Lid Cleats (4)	¾ x 1 - 16⅝
E Bottom Molding (4)	¾ x 2¼ - 20¼	• (12) #8 x 2½" Fh Woodscrews	
F Base Cleats (4)	¾ x 1 11/16 - 19⅛		
G Risers (4)	¾ x 2¼ - 20⅝		

NOTE: Materials listed are for one storage table

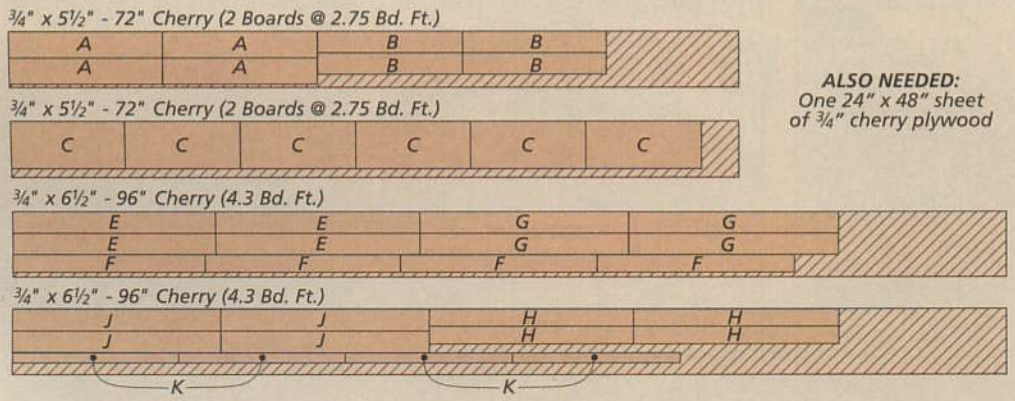

ALSO NEEDED:
One 24" x 48" sheet of ¾" cherry plywood

TOP SECTION VIEW

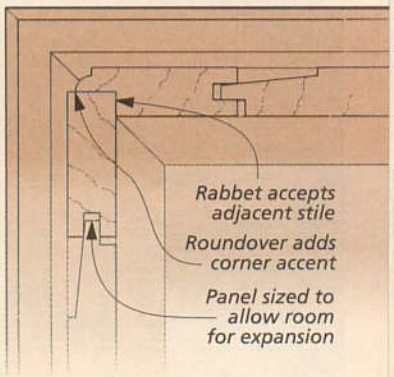

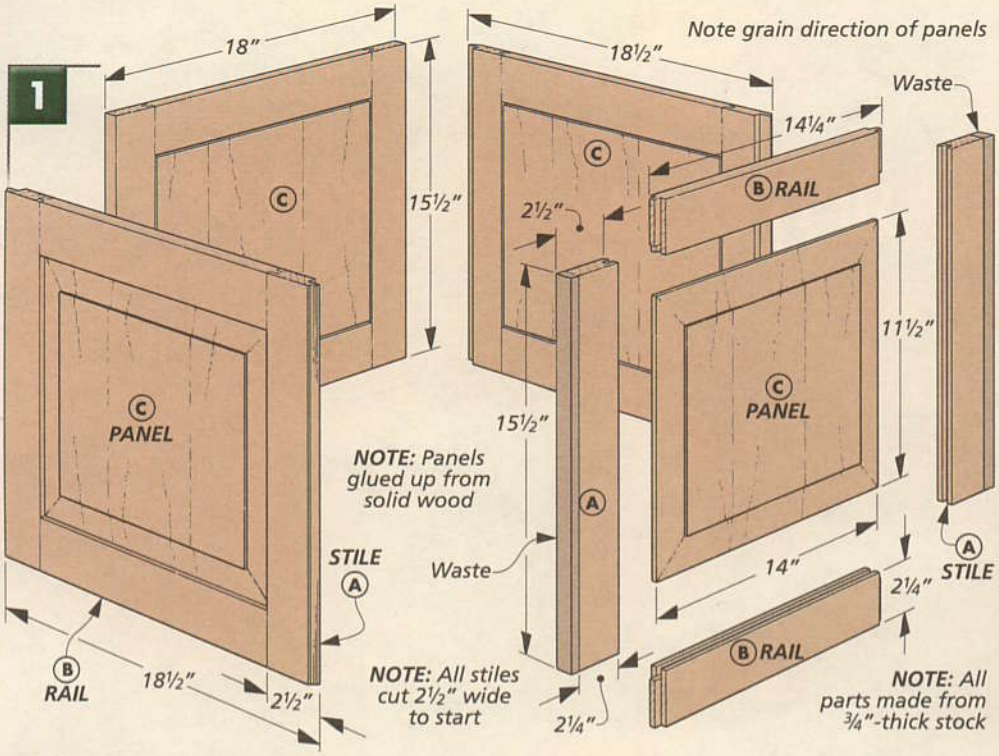

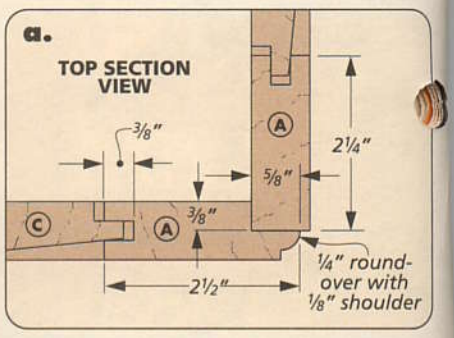

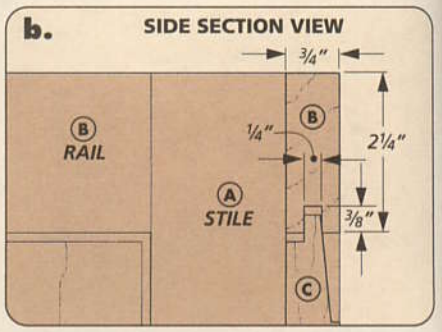

▲ *Turn to page 20 to find how to build and use this sled.*

Frames

The body of the table is a box made of four frame and panel assemblies that start out identical. After they're assembled, two of the sides get trimmed to final width. But more about that later.

RAILS & STILES. The first parts to work on are the eight *stiles (A)* and eight *rails (B)* shown in Fig. 1. Once they are cut to size, you can start work on the tongue and groove joinery. There's an article on page 16 that details how to do this.

PANELS. Once the joinery has been cut, you can move on to gluing up the solid wood *panels (C)*. After the glue has dried, the panels can be cut to final size, as shown in Fig. 1. The panels are sized to allow room for them to expand and contract inside the frames (Figs. 1a and 1b).

Before the panels will fit in the grooves in the frame pieces, they each need a tongue around all four edges. The first step in creating the tongue is to cut a rabbet on the back of the panel. Then I used a simple sled (see margin photo) to help cut a bevel on each edge. The bottom line is that the tongue should end up just under ¼" thick at the edge.

Note: You can create different profiles on the panel by using special raised-panel bits in the router table. You can see a sample of this in the photo on page 34 and get details about using these bits on page 19.

FINISH & ASSEMBLY. When panels are made from solid wood, it's a good idea to apply the finish before assembling the frames. That way, there won't be any unfinished edges showing should the panel contract. (I used a tung oil varnish.)

Now it's time to glue up each assembly. As you do this, check that the frames stay flat and square.

EDGES. The next step is to do some work on the edges of each assembly. A look at Fig. 1a shows that the frames are connected to each other

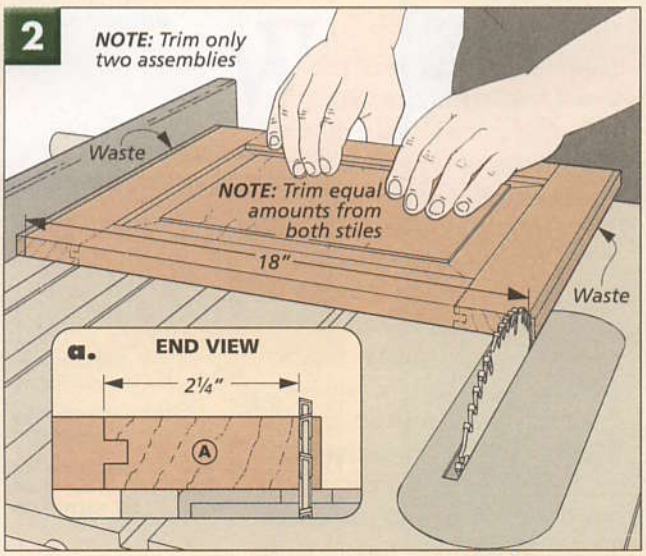

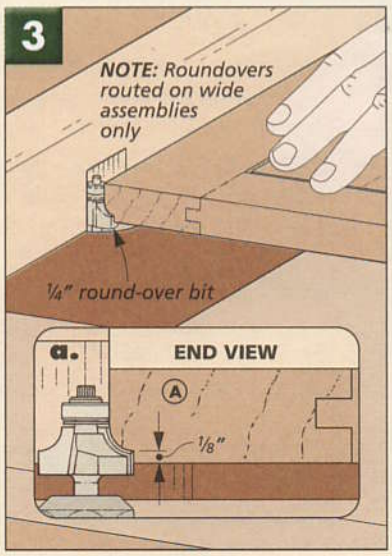

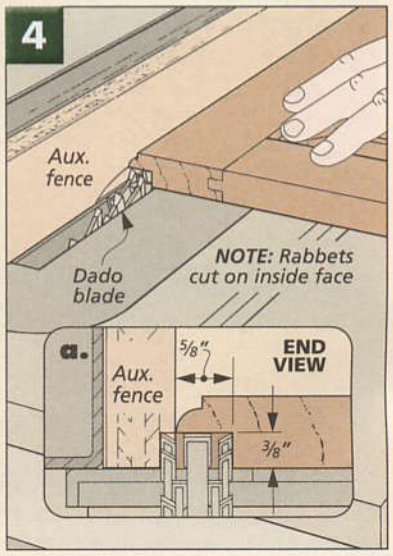

with a rabbet joint. To keep all four sides of the table the same width, two assemblies need to be trimmed. As Fig. 2 shows, you'll need to trim equal amounts off each stile to leave an 18"-wide frame.

The two wider frames need some additional work. The first thing to do is to rout a roundover with a shoulder on the edge of each stile, like you see in Fig. 3. If you look at Fig. 1a, you'll see that this roundover creates a nice accent at each corner.

Next, you can cut the rabbet that accepts the adjacent side panel. Fig. 4 shows how I set up a dado blade and an auxiliary fence to do this.

Now the four frames can be glued together to form the box. It's important that the box stays square and doesn't "twist" as it's glued together. So I used the top of my table saw as a perfectly flat assembly table.

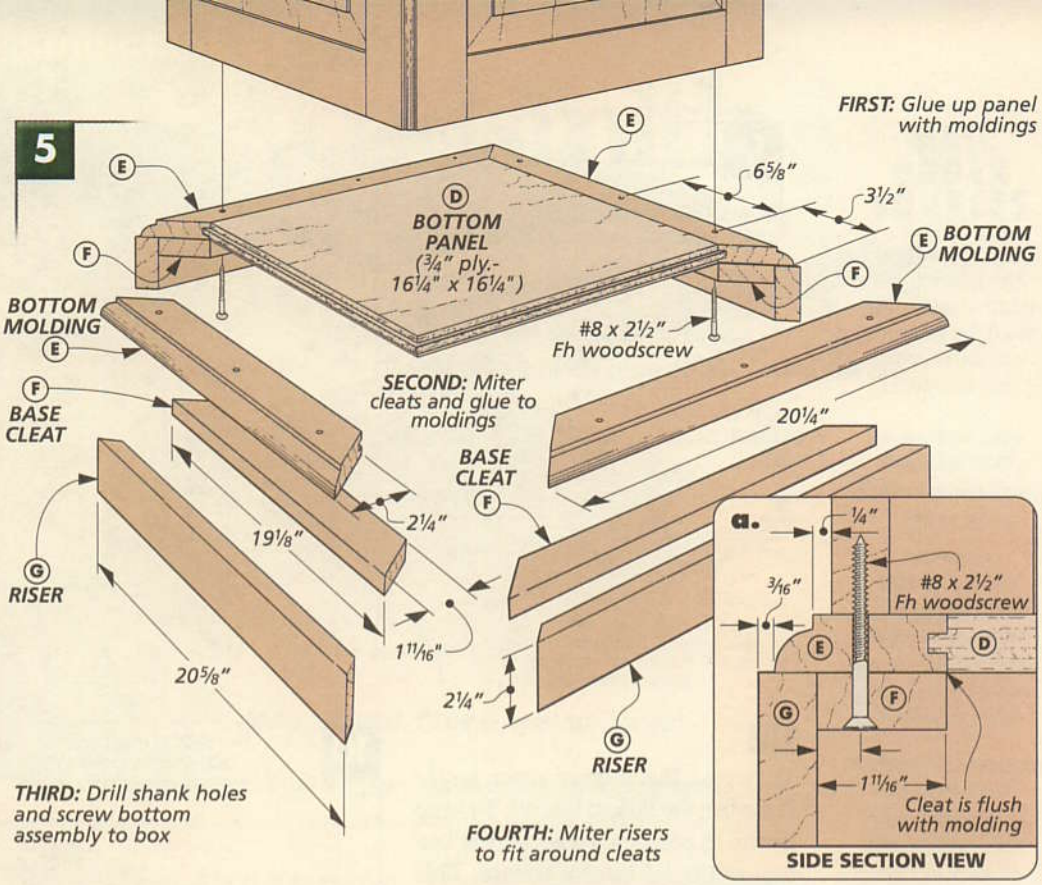

BASE

With the box completed, I moved on to the base that it sits on. A quick look at Fig. 5 shows that the base consists of two parts — a frame and panel assembly, and a riser. I started with the frame and panel.

PLYWOOD. This frame and panel is different from the side panels. Here, the frame is mitered to hide the end grain. And the panel is plywood so there won't be any expansion or contraction forcing the miters apart.

The *bottom panel (D)* is cut to size from ¾" plywood, like you see in Fig. 5. A look at Fig. 6 shows that a tongue is created around the panel by cutting rabbets around each face.

Next, I cut the blanks for the *bottom molding (E)* to finished width as shown in Fig. 5. Then a centered groove is cut on one edge of each molding piece to fit the tongue on the bottom panel (Fig. 7).

After the grooves are cut, the molding is mitered to fit around the panel, and the pieces can be glued together. Then, like you see in Fig. 8, a roundover with a shoulder is routed around the assembly.

CLEATS. Before adding the riser, four *base cleats (F)* are added to the lower face of the bottom assembly flush with the inside edge of the molding (Fig. 5a). This provides a solid gluing and clamping surface when the riser is added later.

With the cleats attached, this is a good time to drill shank and pilot holes as indicated in Fig. 5. Then the base can be screwed and glued to the box, centered from side to side and front to back.

RISER. The *riser (G)* is simply four pieces of ¾"-thick stock mitered to fit around the base cleats (Fig. 5) and glued in place (Fig. 5a).

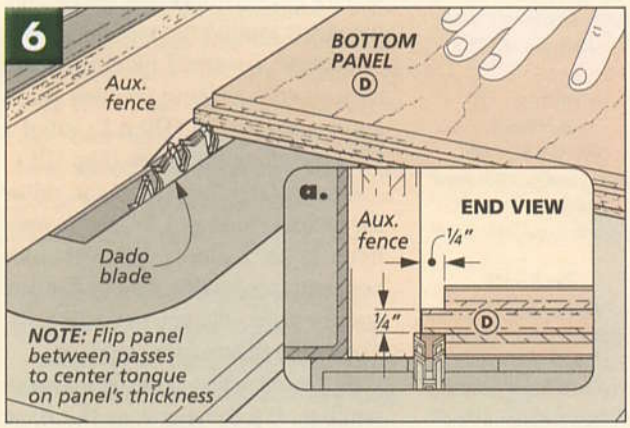

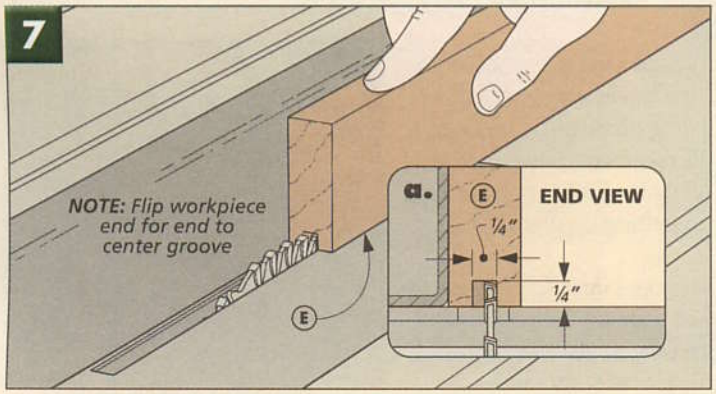

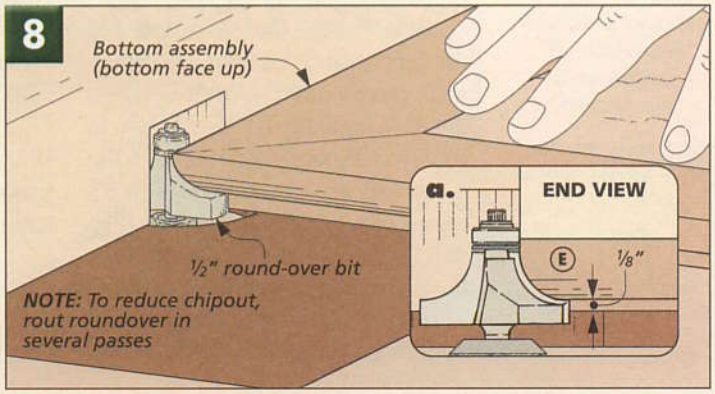

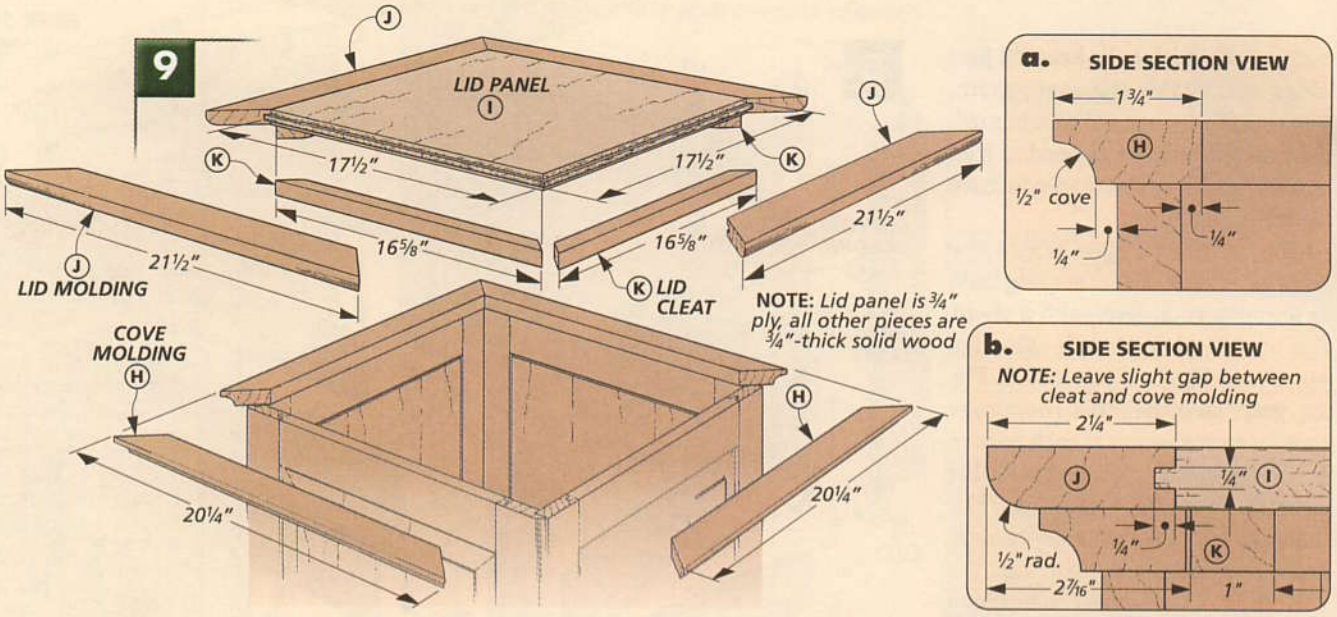

Lid

To access the storage space inside the table, the lid just lifts off. To keep the lid in position, cleats on the bottom of the lid form a square. This square is then trapped by cove molding strips around the top of the box.

MOLDING. I started by cutting the *cove molding (H)* to finished width and rough length. Then I routed a ½" cove along one edge (Fig. 10).

Once that's done, you can miter the molding to length. What you want here is to leave a ¼" shoulder between the outside face of the box and the cove, like you see in Fig. 9a. Then glue the molding in place.

LID. Construction of the lid will seem familiar. It's the same as the base panel. As you can see in Fig. 9, a plywood *lid panel (I)* is wrapped with solid wood *lid molding (J)*. The tongue and groove joinery is just like on the base panel (Fig. 9b).

One difference is that the bottom edge of the lid is softened with a ½" roundover, like you see in Fig. 11.

CLEATS. The last thing to do is to add the *lid cleats (K)*. These are just 1"-wide pieces mitered to fit between the cove molding. It's a good idea to leave a little bit of a gap between the cleats and the cove moldings so it's easier to fit the lid onto the table (Fig. 9b). I cut my cleats ⅛" shorter than the distance between the moldings. Then the cleats are glued to the bottom face of the lid, centered side to side and front to back.

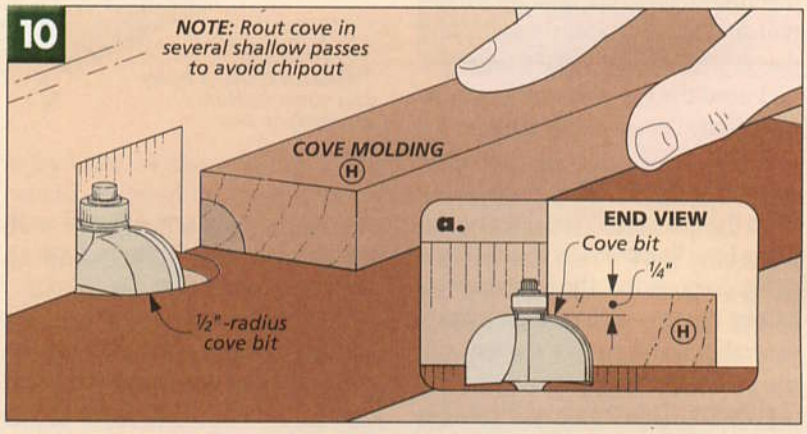

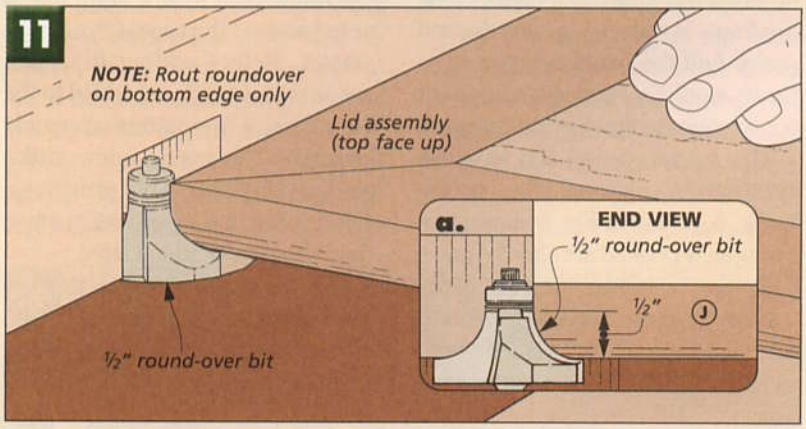

FINISH. All that's left to complete the table is to apply a finish. (I used three coats of a tung oil varnish.) Since the side panels received a finish earlier, I masked off their edges to prevent any more from getting on them. W

The curved shoulders of these panels were cut with a raised-panel bit in the router table. *Turn to page 19 for details.*

SOURCES

SOFA TABLE BOOKCASE

There's not a lot of hardware needed for the sofa table bookcase on page 6. In fact, if you're building the open version (without doors) then all you need are a few woodscrews, washers, and some 1/4"-dia. shelf pins.

HINGES & PULLS. But if you're building the doors, then there are some additional items you'll have to get ahold of. First I chose some small satin-nickel pulls (BWP7523) from *Woodworker's Hardware* (see list at right).

Next, you'll need 3/8" inset, free-swinging hinges (AO7697 3 from *Woodworker's Hardware*). This type of hinge will be readily available from a hardware store or home center (or the sources at right), but don't be surprised if you can't find any with a nickel finish. I ended up buying brass hinges, and then after a light sanding with 400-grit sandpaper, I simply spray painted them silver.

The only other hardware item you'll need for the doors are magnetic catches. I used common surface-mounted catches (and strike plates).

However, you might also want to take a look at the cherry version that's shown on our web site, see "Online Extras" below. It features Craftsman-style pulls that are available from the sources listed at right. (The hinges would also need to be painted black.)

REEDED GLASS. For the doors with glass panels, I went to a local glass shop and purchased 3/16" reeded-glass panels. (You'll want to do this *after* the doors have been assembled so you can give them the exact size of the rabbeted frame openings.) And whether you decide to use reeded glass or standard 1/8" glass, I'd recommend that you order safety glass.

FINISH. Since very little plywood was used on this project, the color of the wood was pretty consistent, so I didn't feel that the wood needed to be stained. Instead, I simply wiped on several coats of a tung-oil varnish.

ADJUSTABLE FLOOR LAMP

When building the lamp on page 22, you won't need much hardware at all. Besides a handful of woodworking screws, all you need is a 1/4"-20 brass insert, a 1"-dia. cherry wood knob (61665 from *Rockler*), and a short length of threaded rod. All of these items should be available at a home center or a woodworking store, or the insert and wood knob can be ordered through the sources listed at right.

The electrical supplies are also available locally at hardware stores and lamp shops. In fact it's often packaged as a complete kit. However, there are additional sources listed at right that offer lamp supplies.

Wiring a lamp is pretty basic, and the instructions should be included in your hardware kit. Still, if you have any reservations or questions, don't hesitate to find someone who can guide you through the process.

RAISED-PANEL BITS

The raised-panel storage tables don't require any special hardware. And if you like the look of a flat-beveled raised panel, you can cut them on the table saw. But curved-profile raised panels can also be built in your shop. All you need is a router table and a vertical raised-panel bit. The one shown on page 19 is made by *Amana* (54520) and can be ordered from the mail-order sources at right.

Woodsmith GO ON-LINE EXTRAS

This issue, there are a few extras available online. First, we're showing a rendering of what the sofa table would look like if it were built with cherry and featured Craftsman-style pulls.

Also, we're including some brief step-by-step instructions for creating a door frame that uses a haunched mortise and tenon instead of the stub tenon and groove shown on page 17. Go to www.Woodsmith.com and look for the "Online Extras" button. W

MAIL ORDER SOURCES

Similar project supplies and hardware may be ordered from the following companies:

Amana Tool Corp.
800-445-0077
www.amanatool.com
Router bits

Lee Valley
800-871-8158
www.leevalley.com
Pulls, Hinges, Wood knobs, Catches, Shelf pins, Lamp supplies, Craftsman pulls

Rockler Woodworking
800-279-4441
www.rockler.com
Hinges, Wood knobs, Router bits, Pulls, Shelf pins, Catches, Lamp supplies, Threaded inserts, Craftsman pulls

Woodworker's Hardware
800-383-0130
www.wwhardware.com
Hinges, Wood knobs, Pulls, Shelf pins, Catches

Woodcraft
800-225-1153
www.woodcraft.com
Hinges, Wood knobs, Router bits, Threaded inserts, Craftsman pulls

Woodsmith Store
800-835-5084
Wood knobs, Threaded inserts, Shelf pins, Amana bits

Woodworker's Supply
800-645-9292
www.woodworker.com
Wood knobs, Router bits, Threaded inserts, Lamp supplies, Craftsman pulls

WOODSMITH PROJECT SUPPLIES

If you would like to order back issues or a hardware kit from *Woodsmith Project Supplies*, please use our Toll-Free order line, see below. It's open Monday through Friday, from 8 AM to 5 PM Central Time. Before calling, please have your VISA, MasterCard, or Discover card ready.

If you would prefer to mail in an order, please call the Toll-Free phone number below for more information concerning shipping charges as well as any applicable sales tax.

1-800-444-7527

Woodsmith *on the web*

- "Online Extras" - Plans, Patterns, & More
- Over 100 Woodworking Tips Online
- Visit Our Readers' Project Photo Gallery
- Project Plans You Can Download
- Catalog of Project Kits, Tools, Jigs, & Plans
- Forums for Woodworking, Tools, & Classifieds
- Links to Other Woodworking Sites
- Order *Woodsmith* & *ShopNotes* Back Issues

www.woodsmith.com

Online Customer Service

Click on Subscriber Services at ***www.woodsmith.com***

- Access your account status
- Change your mailing or email address
- Pay your bill
- Renew your subscription
- Tell us if you've missed an issue
- Find out if your payment has been received

Final Details

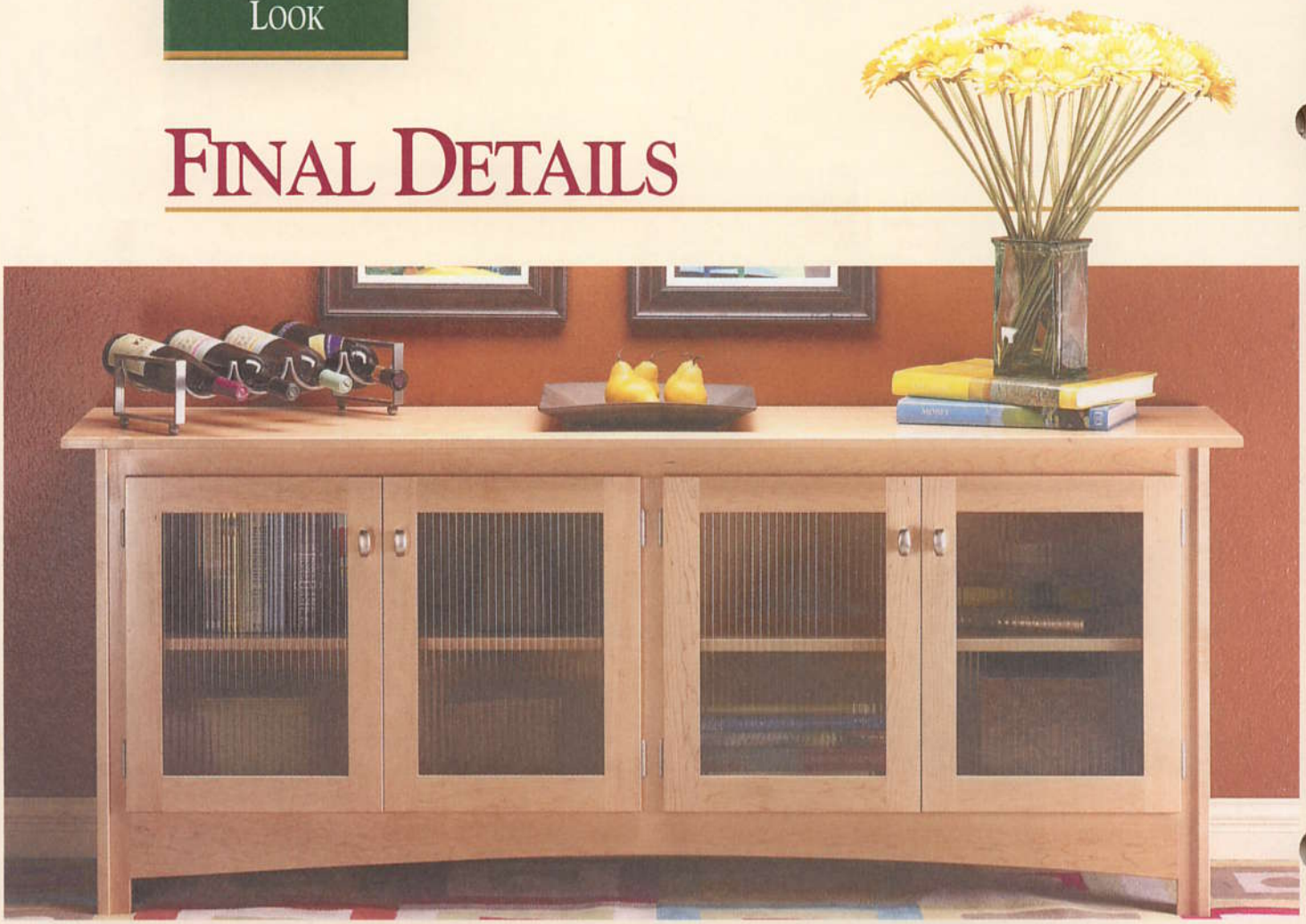

▲ **Bookcase Options**. *This project is loaded with options. You can build it as a simple open bookcase or, for a very different look, add glass-paneled doors. There's even the option of adding solid-wood panel doors. Complete step-by-step plans for the bookcase (and the optional doors) begin on page 6.*

Adjustable Floor Lamp. ► *Build a classic-looking floor lamp that will put the light at exactly the right height — it's easier than you think. Instructions begin on page 22.*

Raised Panel Storage Table. ► *This small accent project offers a lot of practical storage in an elegant "package." And we'll show you two methods for building raised panels like a pro. The table begins on page 30. The raised-panel procedure is described on page 16.*